无锡斯考尔自动控制设备有限公司
Wuxi Score Automatic Control Equipment Co.'ltd

江苏省无锡市新吴区锡贤路123-1号
No. 123-1, XiXian Rd, Xinwu District Wuxi, Jiangsu, 214112, P.R. China
Tel: (+86) 0510-88232861/62/63; Fax: (+86) 0510-88232860

www.scorefluid.com

COMPANY PROFILE

SCORE MORE FOR YOUR PROCESS AUTOMATION

公司简介

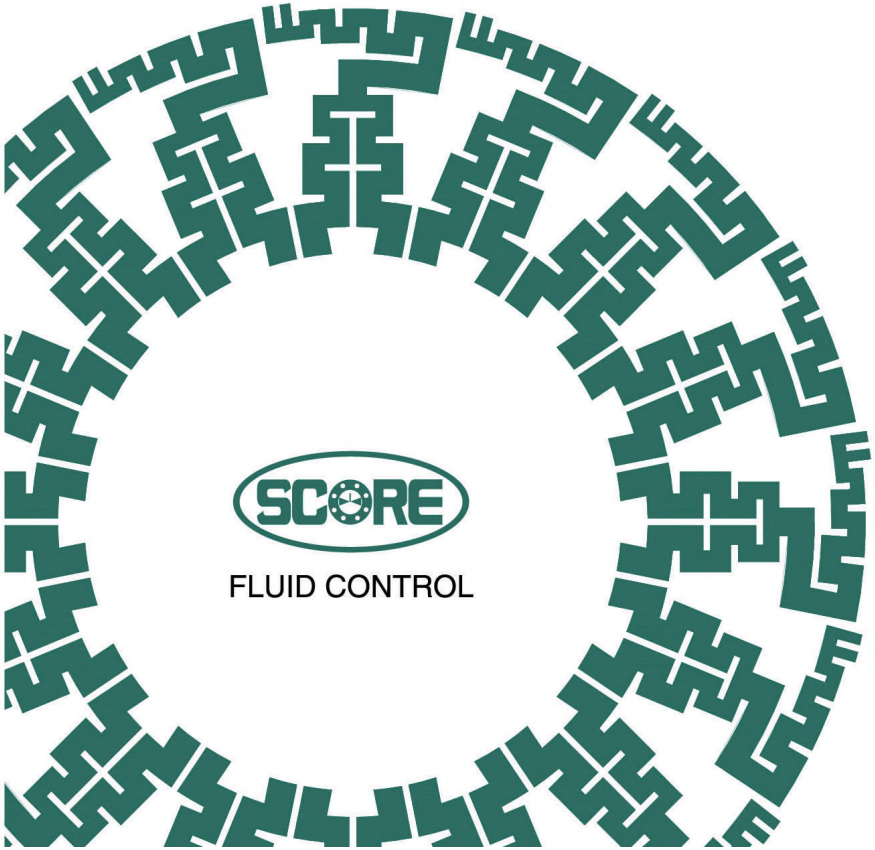

FLUID CONTROL

1 公司简况
2 组织结构
3 重点装备
4 工厂概貌
5 产品制造范围
6 主导产品
7 应用
8 公司资质

1 SCORE Summary
2 SCORE Organization
3 Main Equipment
4 SCORE Factory View
5 Products Range
6 Products Sales Point
7 Application
8 Certification

CONTENTS
目录

公 司 简 况

中加合资的无锡斯考尔（SCORE）自动控制设备有限公司成立于2011年12月，是一家以研发高端控制阀为主的制造型企业，广泛服务于石油化工、化工、化肥、油气、煤化工、冶金、电站、建材、空分等行业的各类装置。无锡SCORE追求卓越的特质，决定了无锡SCORE将为中国过程自动化提供高可靠性的方案。

公司位于无锡市新吴区锡贤路123-1号，交通便利，离高铁无锡东站、高速无锡东均10分钟车程，离无锡机场15分钟车程。

强大的研发能力

SCORE引进先进技术和设计理念，采用ASME、ANSI、API、TSG、CE、IEC等国际、国内规范和标准，广泛研究了国内外各家控制阀的特点，采用最新的计算机软件（3D造型、有限元力学分析、CFD流体分析）成果，对控制阀产品进行了全面的标准化、优化和可靠性分析，设计出最符合各类流体控制需求的控制阀。主导产品有金属球阀、平行闸阀、三偏心蝶阀和各种结构的球形控制阀。金属球阀主要用于有颗粒物、粉尘的混合流体，替代进口，为很多煤化工、多晶硅企业使用。平行闸阀的高可靠性主要用于中石化、中石油等大型企业的重大装置，确保关键场合的可靠切断。三偏心蝶阀适用于各类低压流体的调节和切断。球形阀面广量大，适用于各类普通场合和苛刻工况。根据产品的特点，无锡SCORE的目标市场是石油化工、煤化工、油气、电站、冶金、空分等行业。

SCORE FACTORY

SCORE SUMMARY

The Sino-Canada joint venture Wuxi SCORE Automatic Control Equipment Co., Ltd. was established in December, 2011 which is mainly specialized in research and development of high-end control valves. The products are widely used by all kinds of devices applied in petrochemical, chemical, fertilizer, oil & gas, coal chemical, metallurgy, power plant, construction materials, air separation and other major industries in China. Special features of Wuxi SCORE enable Wuxi SCORE to provide localization plan with high reliability for process automation of China.

The company is located at No.123-1 XiXian Rd, XinWu district, Wuxi, the transportation is convenient. It is 10 minutes' drive from Wuxi east railway station and Wuxi east high-speed station. It is 15 minutes' drive from Wuxi airport.

Strong R & D Ability

SCORE introduced advanced technology and design principles, adopted ASME, ANSI, API, TSG, CE, IEC and other international and domestic regulations and standards, made research on features of control valve of various manufacturers both home and abroad, applied latest computer hardware and software technology (3D modeling, finite element analysis of mechanical, CFD fluid analysis) and proceeded fully standardization, optimization and reliability analysis of control valves in order to design the most suitable control valve to meet control requirements of various fluids. The main products include metal seated ball valve, parallel slide gate valve, triple-offset butterfly valve and globe valves of various structures. The metal seated ball valve is mainly applied for mixed fluid which contains particles and dust, used by many domestic enterprises of coal chemical and polycrystalline silicon industry to replace imported products. The parallel slide gate valve is used in large-sized plants by enterprises as Sinopec and PetroChina due to its high reliability to ensure reliable isolation in critical situations. The triple-offset butterfly valve is for throttling and cut-off of liquid with low pressure. The globe valves are of wide application and large production amount which are applicable for various both conventional and severe services. Based on the product features, Wuxi SCORE is targeted at the following markets: petrochemical, coal chemical, oil & gas, power plant, metallurgy and air separation, etc.

SCORE R & D Department

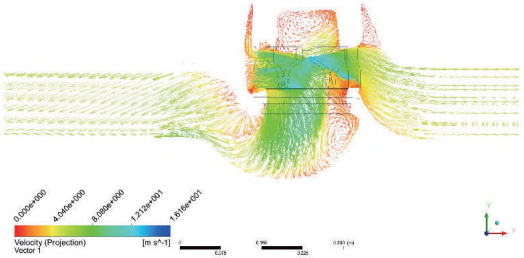

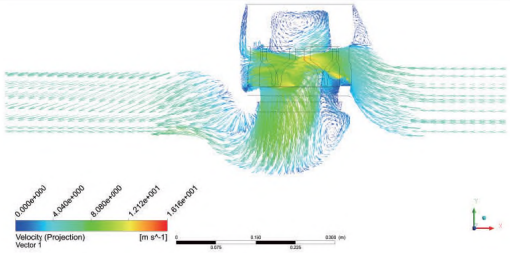

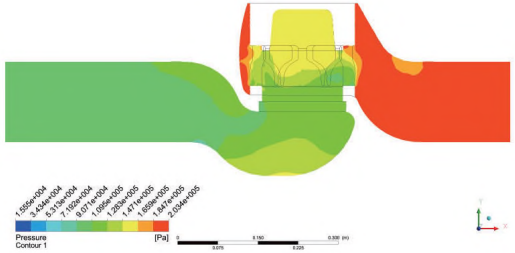

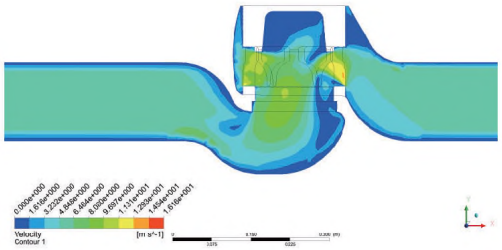

3D Gallery of GC100 3” Cage Valve Body

CFD Analysis for GC100 3” Cage Valve Body

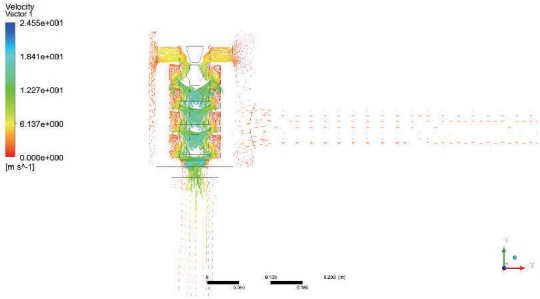

1

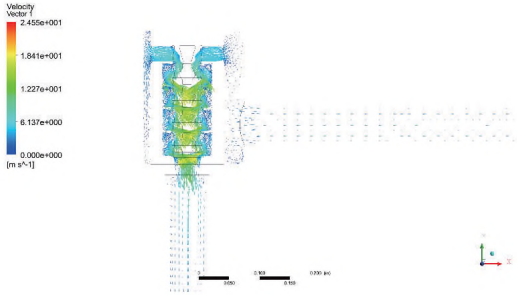

2

3

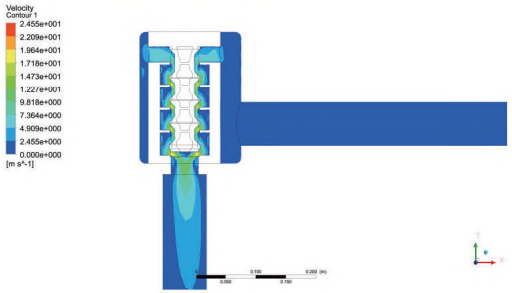

4

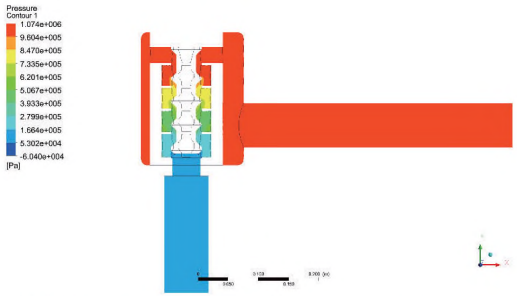

CFD Analysis for AC400 4”x2” ANSI 2500# High Pressure Multi-step Plug Angle Valve

先进的技术转换能力

经过3D造型和CFD分析的Globe（球形阀）阀内腔获得了最大的流通能力和最流畅的流道，SCORE直接将3D内腔图用于铸造金属模具和木模的加工，通过CAD、CAM的方式实现了图纸到模具的零误差技术转换。

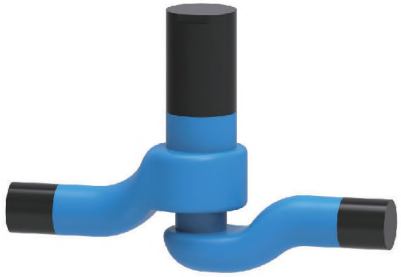

UG 3D Modeling of GC100 6”-1500# Body Gallery

UG 3D Modeling of GC100 6”-1500# Body

Wooden Pattern on CNC

Wooden Pattern of BT300 Disc after CAM（Before Painting）

Advanced Technical Transformation Ability

Globe valve after 3D modeling and CFD analysis gains the highest flow capability and the most fluent path. SCORE directly uses 3D cavity drawing for the machining of metal and wooden pattern for casting. Technical transformation with zero-deviation from drawing to pattern is realized via CAD and CAM.

Finished Wooden Pattern of GC100 4”-1500# Body

可靠的产品实现能力

先进的技术在SCORE将通过先进的设备来实现产品，无锡SCORE斥资2,500万元，构筑了一流的控制阀制造流程，从德国EF采购了金属研磨机用于平行闸阀的研磨，采购了日本KURAKI的卧式镗铣加工中心、韩国DOOSAN的卧式加工中心和卧式数控车床用于各种关键零件的加工，采购的台湾Honor（荣田）精机和台湾油机的数控立车用于加工大型阀体和零件，采购球面车床、球面磨床、球面研磨机等各种专用设备，确保先进技术得到可靠的实施，采购了德国Spectro的移动式光谱分析仪用于PMI检测进货材料。

公司贯彻全球采购的理念，填料、密封环、垫圈、膜片等关键零部件均来自美国Garlock、法国Saint-Gobain、日本Pillar、英国GEE、Flexitallic、US RPP等国际大公司，确保产品的可靠性！

工厂面积7,300m2，2018年90名员工完成了销售收入10,160万元，2019年110名员工有望实现销售收入1.5亿，劳动生产率在行业内处于领先位置，为中国重大装置的过程自动化提供高可靠、高性价比的方案。

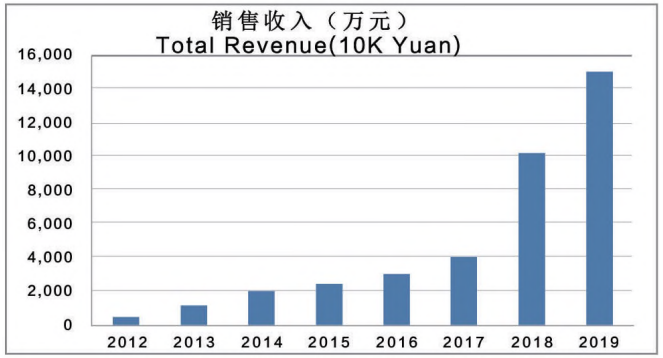

组织结构

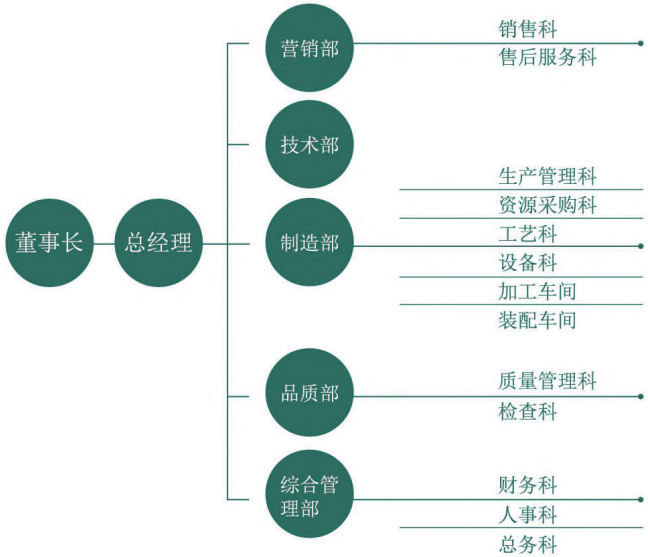

Reliable Product Realization Ability

The advanced technology means product realization by advanced equipment in SCORE. Wuxi SCORE fund 25 million yuan, constructed the first-class control valve manufacture process. Therefore, we purchase metal lapping machine from German EF for lapping of parallel slide gate valve , purchased Japanese KURAKI horizontal boring and milling machining center, purchased machining center and NC lathe from Korean DOOSAN for machining of all kinds of key parts, purchased NC vertical lathe from Taiwanese HONOR SEIKI Co., Ltd. for machining of large-sized valve body and parts, purchased spherical lathe, spherical grinding machine, spherical lapping machine and other special equipment to ensure reliable implementation of advanced technology. We also purchased the movable spectrum analyzer from German Spectro for PMI testing of the raw materials.

Our company adopts global sourcing concept. Packing, seal ring, gasket, diaphragm and other key components are all from international companies to ensure the product reliability, including Garlock, Saint-Gobain of France, Pillar of Japan, GEE of UK, Flexitallic, RPP of America, etc.

The office and factory area of our company covers an area of 7,300 m2. In 2018, 90 employees completed sales revenue of 101.6 million yuan. In 2019, 110 employees are expected to achieve sales revenue of 150 million yuan, labor productivity in the industey is in a leading position.

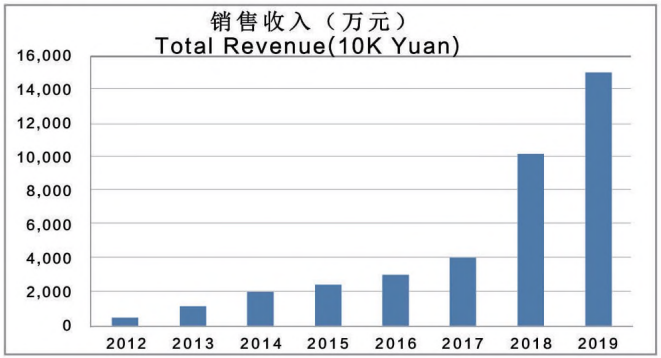

Organization

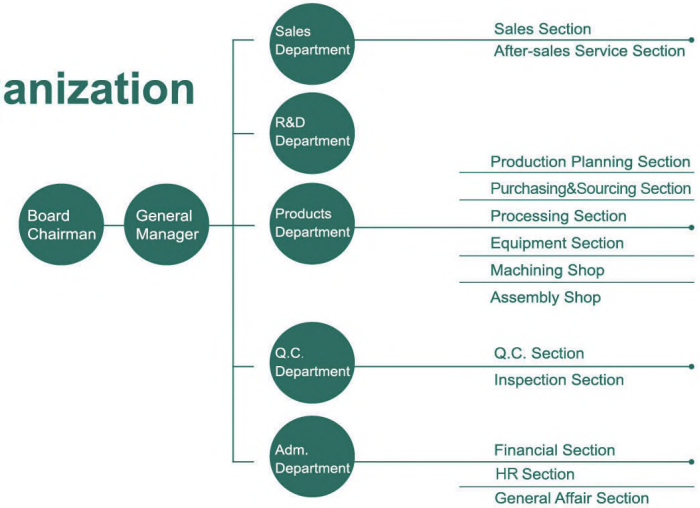

重 点 装 备

主要设备清单

设备名称	数量	设备供应商
卧式镗铣加工中心 KBM-11X	1	日本 KURAKI
卧式加工中心 HM8000	1	韩国 Doosan
数控卧车 PUMA280L	1	韩国 Doosan
数控卧车 PUMA405	2	烟台 Doosan
数控立车 VL-66C	1	台湾 Honor（荣田）精机
数控立车 VL-125C	1	台湾 Honor（荣田）精机
数控立车 VTL1600ATC+G-I 带磨头	1	台湾油机
普通卧车 6140、6150、6163、6185、6110	8	沈阳机床厂等
摇臂钻床	2	中捷友谊
球面车床	2	国产
金属球阀研磨机	5	国产
闸阀研磨机 SM-750	1	德国 EFCO
自动零件清洗机	1	国产
涂装前抛丸机	1	国产
水幕式喷漆房	1	国产
油漆晾干房	1	国产
油漆烘房	1	国产
自动焊机	1	国产
电焊机、亚弧焊机	2	松下
焊条保温炉	1	国产
热处理电阻炉	3	国产
液压综合试验机	4	上海增欣
移动式光谱分析仪 Spectrotest	1	德国 Spectro
手持式光谱分析仪 x SORT	1	德国 Spectro
理化试验机	3	国产
空压机	2	Atlas Copco 等
低温试验设备	1	国产
高温试验设备	1	国产

Main Equipment

Main Equipment List

Equipment Name	QTY.	Equipment Supplier
Horizontal Boring and Milling Machining Center(KBM-11X)	1	KURAKI（JAPAN）
Machining Center (HM8000)	1	Doosan (Korea)
CNC Lathe (PUMA280L)	1	Doosan (Korea)
CNC Lathe (PUMA405)	2	Doosan (Korea)
CNC Vertical Lathe (VL-66C)	1	Honor SEIKO Co., Ltd (Taiwan)
CNC Vertical Lathe (VL-125C)	1	Honor SEIKO Co., Ltd (Taiwan)
CNC Vertical Lathe VTL1600ATC+G-I Belt Grinding Head	1	Taiwan oil machine
Lathe(6140、6150、6163、6185、6110)	8	Shenyang Machine Tool Co., Ltd
Drilling Machine	2	ZOJE friendship
Spherical Lapping Lathe	2	(China)
Spherical Lapping Machine	5	(China)
Metal Grinding Machine (SM-750)	1	EFCO (German)
Automatic Washing Machine	1	(China)
Shot Blasting Machine Before Paint	1	(China)
Spray Paint with Water Curtain	1	(China)
Paint Drying Room	1	(China)
Paint Drying Room	1	(China)
Automatic welding machine	1	(China)
Electrode Welder、Argon Welder	2	Panasonic (Japan)
Dry Oven for Welding Rod	1	(China)
Resistance Furnace for Heat Treatment	3	(China)
Hydraulic Valve Test Bench	4	Shanghai Zengxin (China)
Movable Spectrometer (Spectrotest)	1	Spectro (German)
Portable Spectrometer (x SORT)	1	Spectro (German)
Physical and Chemical Testing Machine	3	(China)
Air Compressor	2	Atlas Copco
Cryogenic Testing Equipment	1	(China)
High Temperature Test Equipment	1	(China)

重点设备展示

Equipment Name: NC Lathe PUMA280L
Band: Doosan (Korea)
Chuck/ Turning Dia.: 280mm/ 400mm
Equipment Value: 620,000Yuan RMB (100,000USD)
Machining Range: Butterfly Valve Body & Disc (≤ DN250)
Ball & Segmental Ball Valve Body (≤ DN200)
Globe Valve Body (DN15~80), Bonnet (≤DN150), Trim (≤DN250)

Equipment Name: CNC Vertical Lathe VL-66C
Band: Honor (Taiwan, China)
Chuck/ Turning Dia.: 660mm/ 860mm
Equipment Value: 1,230,000Yuan RMB (195,000USD)
Machining Range: Butterfly Valve Body (DN300~500) & Disc (DN300~600)
Ball & Segmental Ball Valve Body (DN250~400)
Globe Valve Body (DN100~200), Bonnet (DN150~450), Trim (DN250~DN600)

Main Equipment Show

Equipment Name: CNC Vertical Lathe VL-125C
Band: Honor (Taiwan, China)
Chuck/ Turning Dia.: 1250mm/ 1600mm
Equipment Value: 1,800,000Yuan RMB (290,000USD)
Machining Range: Butterfly Valve Body (DN450~1000) & Disc (DN450~1200)
Ball & Segmental Ball Valve Body (≥ DN300)
Globe Valve Body (DN200~400), Bonnet (DN250~600)

Equipment Name: Movable PMI
Band: Spectro (German)
Equipment Value: 488,000Yuan RMB (79,000USD)
Application Range: Testing of casting, forging, bar, etc.
(Nickel base alloy included)

Equipment Name：CNC Vertical Lathe VTL1600ATC+G-I
Band：YOUJI (Taiwan, China)
Chuck/ Turning Dia.：1,600mm/2,000mm
Equipment Value：2,550,000 Yuan RMB (400,000 USD)
Machining Range: Butterfly Valve Body (DN600~1200) & Disc(DN600~1500)
Ball & Segmental Ball Valve Body (≥ DN300)
Globe & Gate Valve Body (DN300~500), Bonnet (DN300~600)

Equipment Name：Horizontal Boring & Milling Machining Center KBM-11X
Band：KURAKI (Japan)
Chuck/ Turning Dia.：950x1050mm
Equipment Value：3,100,000 Yuan RMB (477,000 USD)
Machining Range: Body & Disc of Butterfly valves (DN300~DN1000)
Ball valves (≤ DN600) & segmental ball valves (≤DN600)

Equipment Name: Machining Center HM8000
Band: Doosan (Korea)
Chuck/ Turning Dia.: 800x800mm
Working Plate Size: 2,600,000Yuan RMB (420,000USD)
Machining Range: Body & Disc of Butterfly valves (≤DN600)
Ball valves (≤ DN450) & segmental ball valves (≤DN450)

Equipment Name: Lathe NC PUMA405
Band: Doosan (Korea)
Working Plate Size.: 380/550mm
Equipment Value: 785,000Yuan RMB (124,000USD)
Machining Range: Body & Disc of Butterfly valves (≤DN350)
Ball valves & segmental ball valves (≤DN250)
Globe Valves Body (DN50~DN100), Bonnet (≤DN200), Trim (≤DN350)

Hydraulic Test Bench

(Hydrostatic Shell Test, Tightness Test, Leakage Test)
Up to DN100@ANSI2500#

Hydraulic Test Bench

(Hydrostatic Shell Test, Tightness Test, Leakage Test)
Up to DN600@ANSI2500#、DN300@ANSI2500#

工 厂 概 貌

进货检验区（Receiving Inspection）

原材料库房（Raw Material Warehouse）

加工车间-01（Machining Workshop-01）

加工车间-02（Machining Workshop-02）

半成品库-本体部（Body Parts Warehouse）

半成品库-执行机构（Actuator Parts Warehouse）

焊接间（Welding Room）

理化室（Physical & Chemical Lab）

Factory View

涂装前抛丸机（Shot Blasting Machine before Painting）

涂装前清洗机（Cleaning Machine before Painting）

装配车间（Assembly Workshop）

试压检验区（Hydro Pressure Test Area）

油漆房（Painting Room）

晾漆房（Painting Cooling Room）

烘漆房（Painting Drying Room）

附件安装调试区（Accessories Assembly & Calibrating Area）

产 品 制 造 范 围

控制阀制造范围

型号	名称	压力等级	口径
球形阀			
GS100	顶部导向型单座调节阀	ANSI 150#~600#	1/2”~8”
		ANSI 900#~2500#	1”~2”
GS200	小流量单座调节阀	ANSI 150#~2500#	1/2”~1”
GS600	衬四氟单座调节阀	ANSI 150#	3/4”~8”
GC100	套筒导向型调节阀	ANSI 150#~600# ANSI 900#~1500# ANSI 2500#	1”~24” 1”~18” 1”~16”
GC200	多孔式套筒导向型调节阀		
GC300	迷宫式套筒导向型调节阀		
GC400	多段式阀芯套筒导向调节阀		
GT100	三通分流调节阀（不平衡型）	ANSI 150#~600# ANSI 900#~1500# ANSI 2500#	1”~24” 1”~18” 1”~16”
GT200	三通合流调节阀（不平衡型）		
GT300	三通分流调节阀（平衡型）		
GT400	三通合流调节阀（平衡型）		
GT500	三通分流调节阀（平衡型）		
GT600	三通合流调节阀（平衡型）		
AS100	顶部导向型单座角阀	ANSI 150#~600# ANSI 900#~1500# ANSI 2500#	1”~24” 1”~18” 1”~16”
AC100	套筒导向型角阀		
AC200	多孔式套筒导向型角阀		
AC300	迷宫式套筒导向型角阀		
AC400	多段式阀芯套筒导向型角阀		
球阀			
BV100	V型球阀（对夹式）	ANSI 150#~600#	1”~18”
BV120	V型球阀（法兰式）		
BE100	凸轮挠曲阀（对夹式）	ANSI 150#~600#	1”~12”
		ANSI 150#~300#	1”~18”
BE120	凸轮挠曲阀（法兰式）	ANSI 150#~600#	1”~12”
		ANSI 150#~300#	1”~18”
BE130	凸轮挠曲阀（短法兰式）	ANSI 150#~600#	1”~12”
		ANSI 150#~300#	1”~18”
BS100	软密封球阀（浮动式）	ANSI 150#	1/2”~8”
		ANSI 300#	1/2”~6”
		ANSI 600#	1/2”~4”
BS200	软密封球阀（固定式）	ANSI 150#~600#	2”~24”
BM100	金属球阀（浮动）	ANSI 150#~600#	1/2”~4”
BM200	金属球阀（固定）	ANSI 150#~600#	2”~24”
平行闸阀			
PG100	平行闸阀	ANSI 150#~2500#	1-1/2”~48”

Products Line

Control Valves Ranges

Type	Valve Name	Pressure Rating	Valve Size
Globe Valve			
GS100	Top Guided Single Seat Globe Valves	ANSI 150#~600#	1/2”~8”
		ANSI 900#~2500#	1”~2”
GS200	Small Flow Single Seat Globe Valves	ANSI 150#~2500#	1/2”~1”
GS600	Teflon Lined Single Seat Globe Valves	ANSI 150#	3/4”~8”
GC100	Cage Guided Globe Valves	ANSI 150#~600# ANSI 900#~1500# ANSI 2500#	1”~24” 1”~18” 1”~16”
GC200	Multi-hole Cage Guided Globe Valves		
GC300	Labyrinth Cage Guided Globe Vaves		
GC400	Multi-step Plug Cage Guided Globe Valves		
GT100	3-Way Diverting Globe Valves(Unbalanced type)	ANSI 150#~600# ANSI 900#~1500# ANSI 2500#	1”~24” 1”~18” 1”~16”
GT200	3-Way Mixing Globe Valves (Unbalanced type)		
GT300	3-Way Diverting Globe Valves(Balanced type)		
GT400	3-Way Mixing Globe Valves (Balanced type)		
GT500	3-Way Diverting Globe Valves(Balanced type)		
GT600	3-Way Mixing Globe Valves (Balanced type)		
AS100	Top Guided Single Seat Angle Valves	ANSI 150#~600# ANSI 900#~1500# ANSI 2500#	1”~24” 1”~18” 1”~16”
AC100	Cage Guided Angle Valves		
AC200	Multi-hole Cage Guided Angle Valves		
AC300	Labyrinth Cage Guided Angle Vaves		
AC400	Multi-step Plug Cage Guided Angle Valves		
Ball Valve			
BV100	Concentric Type V-notch Ball Valves (Wafer)	ANSI 150#~600#	1”~18”
BV120	Concentric Type V-notch Ball Valves(Flanged)		
BE100	Eccentric Rotating Plug Valves (Wafer)	ANSI 150#~600#	1”~12”
		ANSI 150#~300#	1”~18”
BE120	Eccentric Rotating Plug Valves (Flanged)	ANSI 150#~600#	1”~12”
		ANSI 150#~300#	1”~18”
BE130	Eccentric Rotating Plug Valves (Short Flanged)	ANSI 150#~600#	1”~12”
		ANSI 150#~300#	1”~18”
BS100	Straight Through Ball Valves (Floating)	ANSI 150#	1/2”~8”
		ANSI 300#	1/2”~6”
		ANSI 600#	1/2”~4”
BS200	Straight Through Ball Valves (Trunnion)	ANSI 150#~600#	2”~24”
BM100	Metal Seated Ball Valves (Floating)	ANSI 150#~600#	1/2”~4”
BM200	Metal Seated Ball Valves (Trunnion)	ANSI 150#~600#	2”~24”
Parallel Slide Gate Valve			
PG100	Parallel Slide Gate Valves	ANSI 150#~2500#	1-1/2”~48”

控制阀制造范围

型号	名称	压力等级	口径
蝶阀			
BT200	双偏心蝶阀（对夹式）	ANSI 150#~300#	3”~60”
BT220	双偏心蝶阀（法兰式）		
BT300	三偏心蝶阀（对夹式）	ANSI 150#~300#	3”~60”
		ANSI 600#	3”~36”
BT320	三偏心蝶阀（法兰式）	ANSI 900#	3”~24”
		ANSI 1500#~2500#	4”~18”
BT600	低负载型蝶阀	HG/JB PN0.25	3”~128”
BT620	焊接式三偏心蝶阀（法兰式）		
BT700	衬胶蝶阀（对夹式）	ANSI 150#	1.5”~40”
BT800	衬四氟蝶阀（对夹式）		1.5”~32”
自力式调节阀			
PR100	阀前式	ANSI 150#~600#	1/2”~8”
PR200	阀后式		

执行机构制造范围

型号	名称	动作型式	执行机构尺寸
D100L	多弹簧气动薄膜式	直行程	220、270、350、450、550、650
P100LA	气动活塞式	直行程	200、300、450、600
P300LA	气动活塞式	直行程	200、300、370、450、600、800、1000
D100RA	多弹簧气动薄膜式	角行程	220、270、350、450、550、650
P100RA	拨叉式	角行程	
P200RA	气动活塞式（齿轮、齿条式）	角行程	60、80、90...235、300、350、400

Control Valves Ranges

Type	Valve Name	Pressure Rating	Valve Size
Butterfly Valve			
BT200	Double Offset Butterfly Valves (Wafer)	ANSI 150#~300#	3”~60”
BT220	Double Offset Butterfly Valves (Flanged)		
BT300	Triple Offset Butterfly Valves (Wafer)	ANSI 150#~300#	3”~60”
		ANSI 600#	3”~36”
BT320	Triple Offset Butterfly Valves (Flange)	ANSI 900#	3”~24”
		ANSI 1500#~2500#	4”~18”
BT600	Light Duty Damper Type Butterfly Valves	HG/JB PN0.25	3”~128”
BT620	Welded Triple Offset Butterfly Valve (Flanged)		
BT700	Rubber Lined Butterfly Valve (Wafer)	ANSI 150#	1.5”~40”
BT800	Teflon Lined Butterfly Valve (Wafer)		1.5”~32”
Self–Operated Regulator			
PR100	Pressure Regulator	ANSI 150#~600#	1/2”~8”
PR200	Pressure Relief		

Actuator Ranges

Type	Actuator Name	Motion Type	Actuator Size
D100L	Multi Spring Pneumatic Diaphragm	Linear	220、270、350、450、550、650
P100LA	Pneumatic Cylinder	Linear	200、300、450、600
P300LA	Pneumatic Cylinder	Linear	200、300、370、450、600、800、1000
D100RA	Multi Spring Pneumatic Diaphragm	Rotary	220、270、350、450、550、650
P100RA	Scotch & Yoke	Rotary	
P200RA	Pneumatic Cylinder (Rack & Pinion)	Rotary	60、80、90...235、300、350、400

主 导 产 品

球形阀

球形阀是过程控制中最常用、最可靠的产品，品种、结构多样适用于各类不同的工况，从常温、常压到各类严苛工况，在SCORE总能找到一款满足过程控制的需要。

众多的阀型可选

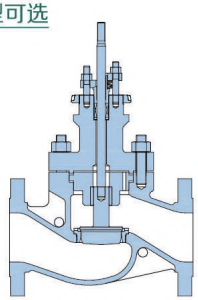

GS100 Top Guided Single Seat Globe Valve

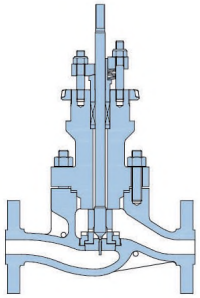

GS200 Small Flow Single Seat Globe Valve

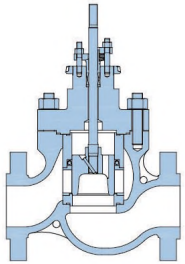

GC100 Cage Guided Globe Valve

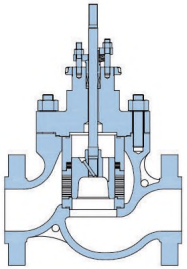

GC200 Multi-hole Cage Guided Globe Valve

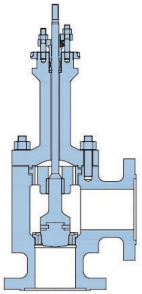

AS100 Top Guided Single Seat Angle Valve

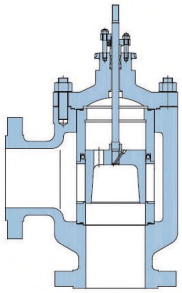

AC100 Cage Guided Angle Valve

Main Products

Globe Valves

The globe valve is the most common and reliable product used in process control with many types and structures which is applicable in different working conditions, including normal temperature and pressure to all kinds of severe service. You can always find what you need for process control in SCORE.

Various kinds of valve are optional

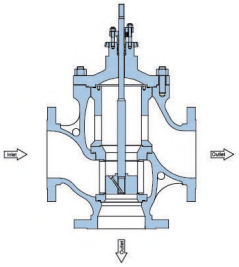

GT100 Cage Guided 3-Way Diverting Globe Valve

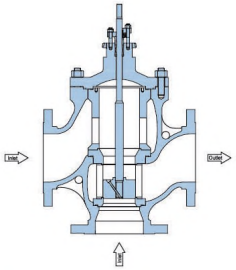

GT200 Cage Guided 3-Way Mixing Globe Valve

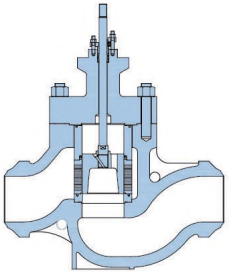

GC300 Labyrinth Cage Guided Globe Valve

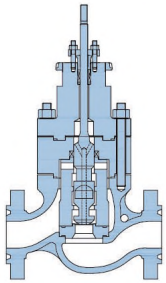

GC400 Multi-step Plug Cage Guided Globe Valve

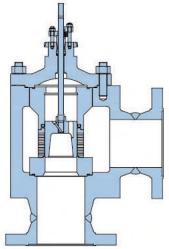

AC200 Multi-hole Cage Guided Angle Valve

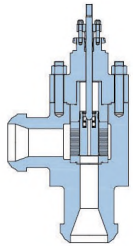

AC300 Labyrinth Cage Guided Angle Valve

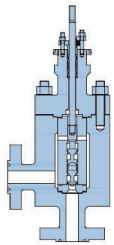

AC400 Multi-step Plug Cage Guided Angle Valve

多种阀盖型式可选

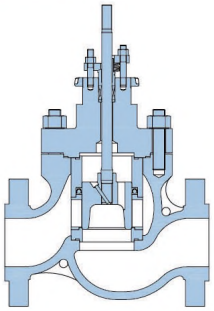

Standard Bonnet
(-17~+230℃)

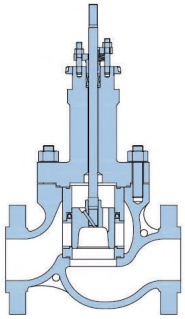

Extension Bonnet
(-45~-17℃, ≥230℃)

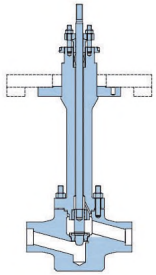

Cryogenic Bonnet
(With Cool Box Plate) (-196~-45℃)

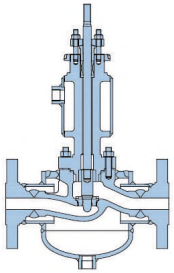

Full-Jacket Bonnet & Body

Various Kinds of Bonnet are Optional

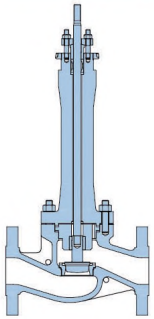

Cryogenic Bonnet
(Without Plate)(-196~-45℃)

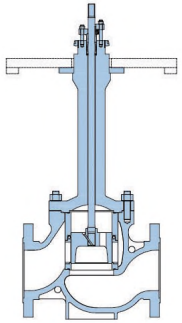

Cryogenic Bonnet
(With Cool Box Plate) (-196~-45℃)

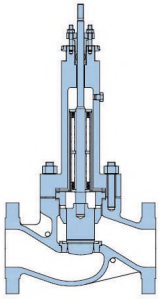

GS100 Bellows Bonnet

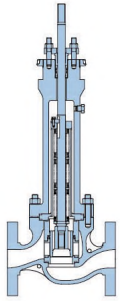

GC100 Bellows Bonnet
(Up to 4")

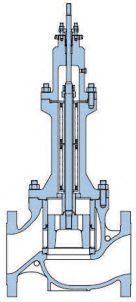

GC100 Bellows Bonnet
(Over 6")

多种型式填料可选

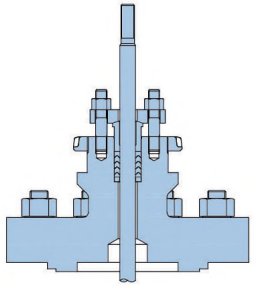

RFFE V Ring Packing

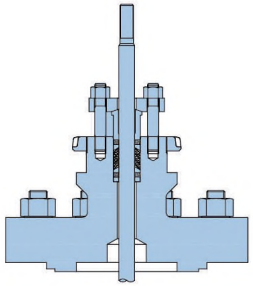

EVSP9000 Graphite
Packing

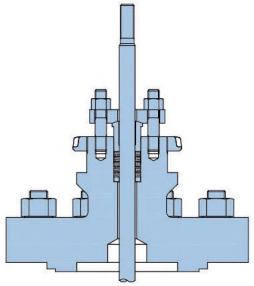

Square Braided
Fiber Packing

Various kinds of packing are optional

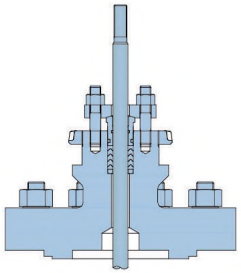

Double Seal Packing
(-45℃~+200℃)

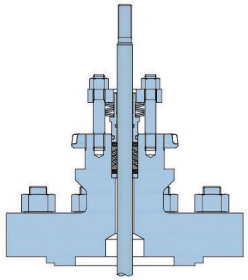

Low Fugitive
Emissions Live-Loading
Packing for API 622

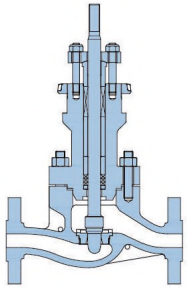

Packing for Slurry
Service

GS系列：顶部导向型单座调节阀

GS100：顶部导向型单座调节阀

GS200：小流量单座调节阀

顶部导向型单座调节阀结构简单，易于操作、维护，大量使用于各类工况，特别是常压、常压差场合，是最经济、可靠的控制阀。流体压力不平衡型阀芯，只用在较低压差和关闭压差的场合。

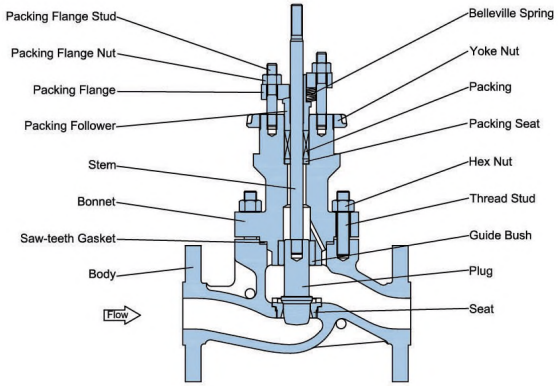

GS100 Parts List (≤ANSI 600# 1/2"~1")

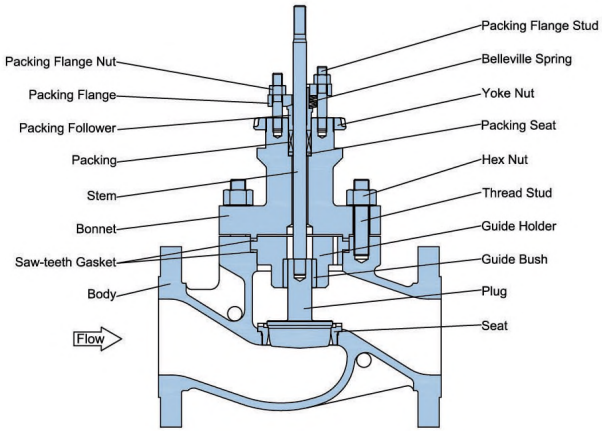

GS100 Parts List (≤ANSI 600# 1-1/2" and Over)

GS SERIES TOP GUIDED SINGLE SEAT GLOBE VALVES

GS100: Top Guided Single Seat Globe Valves

GS200: Small Flow Single Seat Globe Valves

The top guided single seat globe valve is compact and simple, easy operating and maintenance which can be used under various applications, especially under normal pressure and normal pressure drop. Valves of this type are the most economical and reliable. Valve plug of unbalanced only applies to lower pressure drop.

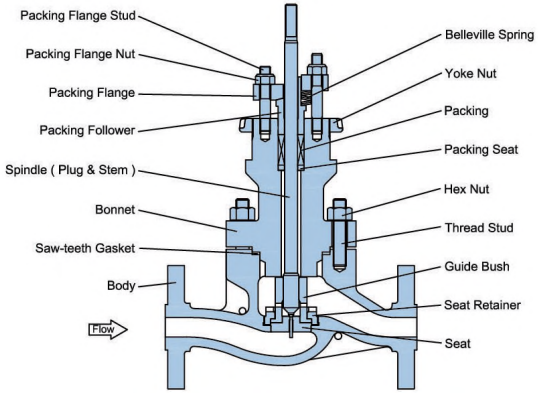

GS200 Parts List (With Needle Plug)

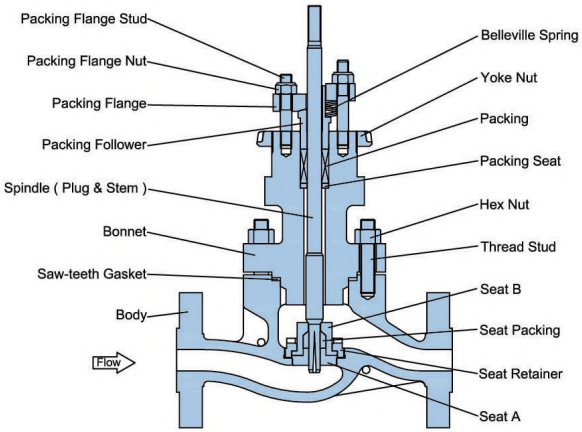

GS200 Parts List (With V-cut Plug)

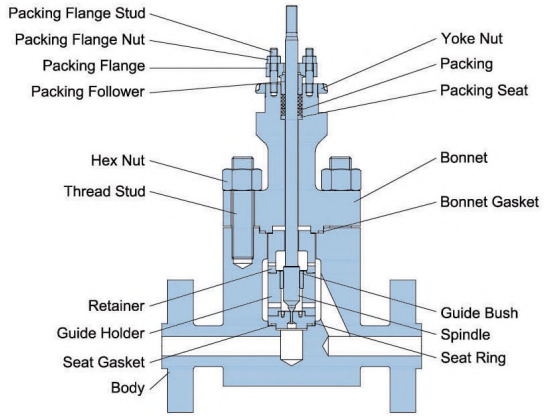

GS100 or GS200 Parts List (≥ANSI900#)

各种流量特性可选

GS100 IEC EQ% Plug

GS100 IEC Linear

GS100 Large Cv Modified EQ%

GS100 Large Cv Modified Linear

规格

本体型式	GS100		GS200
阀门口径	1/2”~8”	1”~4”	1/2”~1”
压力等级	ANSI 150#~600#, PN16~PN100	ANSI 900#~2500#, PN160~PN400	ANSI 150#~2500#, PN16~PN400
连接方式	法兰式、焊接式、内部法兰式		
流体温度	-196~+565℃		
阀体材质	WCB/A105, WC6/F11, WC9/F22, LCB/LF2, CF8/F304, CF8M/F316, CF3/F304L, CF3M/F316L, Duplex, Monel, Hastelloy, Inconel, Titanium, etc…		
阀内件材质	A276-316, A276-316/Stellited, Duplex, Monel, Hastelloy, Inconel, Titanium, etc…		
流量特性	等百分比、线性、改良等百分比、改良线性、开关		
可调比	50:1		30:1 (针形阀芯) 50:1 (V 型切口阀芯)
阀座泄漏量	ANSI Class Ⅳ, Ⅴ, Ⅵ		
标配执行机构	D100LA: 多弹簧薄膜式执行机构 P100LA: 活塞式气缸执行机构		

GS100 On-off Plug

GS100 Soft Plug

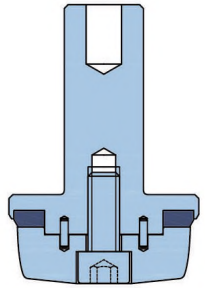

GS100 Soft Plug

GS200 V-cut Plug, Modified Linear

GS200 Needle Plug, Linear

Specifications

Body Styles	GS100		GS200
Body Size	1/2”~8”	1”~4”	1/2”~1”
Body Rating	ANSI 150#~600#, PN16~PN100	ANSI 900#~2500#, PN160~PN400	ANSI 150#~2500#, PN16~PN400
Connections	Flanges, Butt Weld, Socket Weld, Integral Flanges		
Fluid Temperature	-196~+565℃		
Body Material	WCB/A105, WC6/F11, WC9/F22, LCB/LF2, CF8/F304, CF8M/F316, CF3/F304L, CF3M/F316L, Duplex, Monel, Hastelloy, Inconel, Titanium, etc…		
Trim Material	A276-316, A276-316/Stellited, Duplex, Monel, Hastelloy, Inconel, Titanium, etc…		
Flow Characteristics	EQ%, Linear, Modified EQ%, Modified Linear, On-off		
Rangeability	50:1		30:1 (Needle plug) 50:1 (V-cut plug)
Seat Leakage	ANSI Class Ⅳ, Ⅴ, Ⅵ		
Actuator Combination	D100LA: Multi-spring Pneumatic Diaphragm Actuator P100LA: Pneumatic Piston Cylinder Actuator		

GC系列：套筒导向型调节阀

GC100: 套筒导向型调节阀

GC200: 多孔式套筒导向型调节阀

GC100系列套筒导向型球形调节阀是一种大容量、动态稳定性高、适合苛刻工况条件的控制阀，广泛用于大流量，高温、高压控制的场合。阀芯为流体压力平衡结构，这样作用在阀芯的流体压力是平衡的，只需要较小的执行机构推力即可达到稳定控制。

GC200系列由多孔式的套筒代替了GC100标准型套筒，可以一定程度地控制流体流速，从而适度降低噪音、防止空化的发生。

GC100、GC200不能满足工况条件的，建议选择GC300/AC300迷宫阀和GC400/AC400多段式阀芯型控制阀。

GC100-D100LA

GC200-P100LA

GC SERIES CAGE GUIDED GLOBE VALVES

GC100: Cage Guided Globe Valves

GC200: Multi-hole Cage Guided Globe Valve

Cage guided Globe valve of GC100 series is a kind of control valve with large capacity, high dynamic stability which is suitable to a variety of heavy duty services. It is widely applied under large flow, high temperature and high pressure applications. Benefit from its balance plug, reliable control is realized with smaller thrust by the actuator.

Instead of standard cage of GC100, GC200 series uses multi-hole cage, which may control fluid velocity in order to reduce noise and prevent cavitation.

It is recommended to use GC300/AC300 labyrinth cage valve and GC400/AC400 control valve with multi-step plug, when GC100, GC200 couldn't fit with the fluid condition.

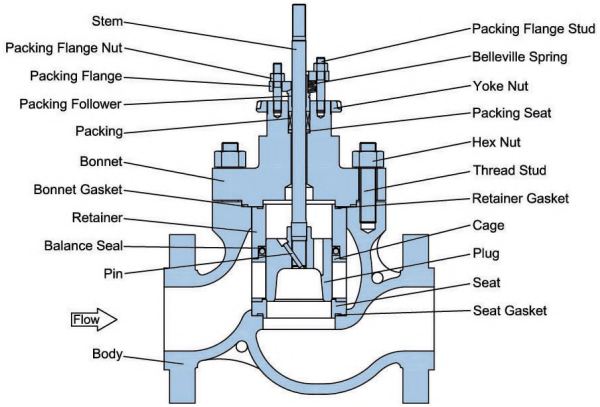

GC100 Parts List

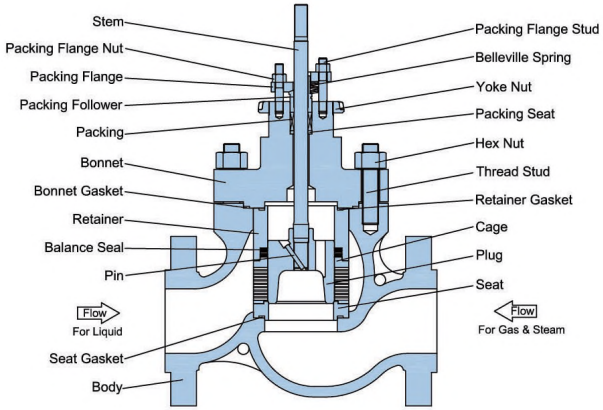

GC200 Parts List

GC系列：套筒导向型调节阀

各种流量特性的套筒可选

GC100 EQ% Cage

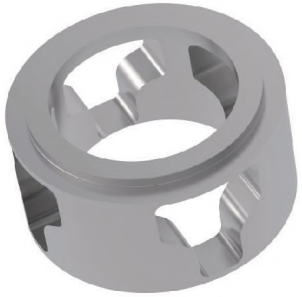

GC100 Linear Cage

规格

本体型式		GC100: 球形阀		GC200: 球形阀
		AC100: 角阀		AC200: 角阀
阀门口径		1"~32"	1"~18"	1"~16"
压力等级		ANSI 150#~600#	ANSI 900#~1500#	ANSI 2500#
连接方式		法兰式（RF, RTJ, FM）、焊接式（SW, BW）、内部法兰式、其他		
流体温度		-196~+565℃		
阀体材质		WCB/A105, WC6/F11, WC9/F22, LCB/LF2, CF8/F304, CF8M/F316, CF3/F304L, CF3M/F316L, Duplex, Monel, Hastelloy, Inconel, Titanium, etc…		
阀内件材质		A182-F6a, A182-F316, A564-630, F11/Stellited, Duplex, Monel, Hastelloy, Inconel, Titanium, etc…		
流量特性		等百分比、线性、改良等百分比、改良线性		
可调比		50:1		
阀座泄漏量	金属阀座	ANSI Class Ⅳ, Ⅴ or MSS-SP-61		
	软阀座	ANSI Class Ⅵ		
标配执行机构		D100LA: 多弹簧薄膜式执行机构 P100LA: 活塞式气缸执行机构		

GC SERIES CAGE GUIDED GLOBE VALVES

Various Kinds of Cage are Optional

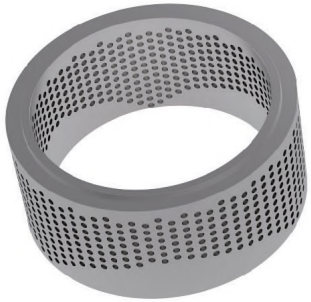

GC200 EQ% Cage

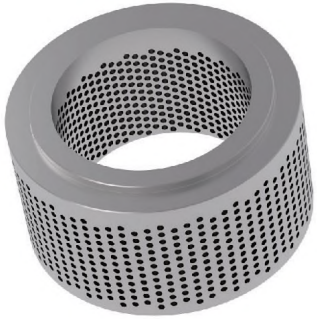

GC200 Linear Cage

Specifications

Body Styles		GC100: Globe Valve		GC200: Globe Valve
		AC100: Angle Valve		AC200: Angle Valve
Body Size		1"~32"	1"~18"	1"~16"
Body Rating		ANSI 150#~600#	ANSI 900#~1500#	ANSI 2500#
Connections		Flanges, Butt Weld, Socket Weld, Integral Flanges, etc…		
Fluid Temperature		-196~+565℃		
Body Material		WCB/A105, WC6/F11, WC9/F22, LCB/LF2, CF8/F304, CF8M/F316, CF3/F304L, CF3M/F316L, Duplex, Monel, Hastelloy, Inconel, Titanium, etc…		
Trim Material		A182-F6a, A182-F316, A564-630, F11/Stellited, Duplex, Monel, Hastelloy, Inconel, Titanium, etc…		
Flow Characteristics		EQ%, Linear, Modified EQ%, Modified Linear		
Rangeability		50:1		
Seat Leakage	Metal Seat	ANSI Class Ⅳ, Ⅴ or MSS-SP-61		
	Soft Seat	ANSI Class Ⅵ		
Actuator Combination		D100LA: Multi-spring Pneumatic Diaphragm Actuator P100LA: Pneumatic Piston Cylinder Actuator		

迷宫式套筒导向型调节阀

GC300：迷宫式套筒导向型直通调节阀

AC300：迷宫式套筒导向型角阀

SCORE的GC300、AC300系列迷宫式套筒阀是高温、高压差等苛刻工况最有效、最可靠的控制阀。当流体流经独特设计的迷宫式流道，流体不断地变向，不断地冲击直角变向的流道，压力逐步损失，动能逐步损耗，流速得到有效控制。对于非压缩性流体，能够有效地防止空化和气蚀，对于可压缩性流体，能够有效地降低噪音。迷宫阀能够有效防止阀内件被冲刷、防止震荡产生。

独立流道设计的芯片，相比混合流道设计能够获得比较准确的数学模型，SCORE拥有迷宫阀设计计算的完整的数学模型，能够根据客户的具体工况定制最合理的方案，达到最好的控制效果。

GC300-D100LA ANSI 1500# C12A 10”x8”

AC300 ANSI 2500# WB36 6”x2.5”

LABYRINTH CAGE GUIDED GLOBE VALVES

GC300：Labyrinth Cage Guided Globe Valve

AC300：Labyrinth Cage Guided Angle Valve

Labyrinth cage valve of series GC300 and AC300 of SCORE is the most effective and reliable control valve under high temperature, high pressure drop and other severe service. The specially designed flow path forces fluid through a tortuous path of right-angle turns, constantly changes its directions and impacts on the path, to control the pressure and kinetic energy letdown and limit the fluid velocity effectively. This kind of valve may effectively prevent cavitation for uncompressed fluid and may effectively reduce the noise of compressed fluid. Labyrinth cage valve may effectively prevent flushing and vibration of the valve trim.

Compared with “mixed path” design, “independent path” design may obtain more accurate mathematical model. SCORE holds complete mathematical model of labyrinth valve design and calculation, which enables SCORE to provide the most suitable solutions for customers based on severe service.

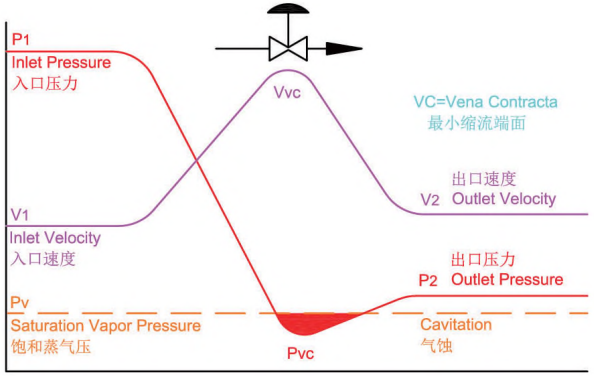

Profile through Valve for conventional control valve (Liquid)

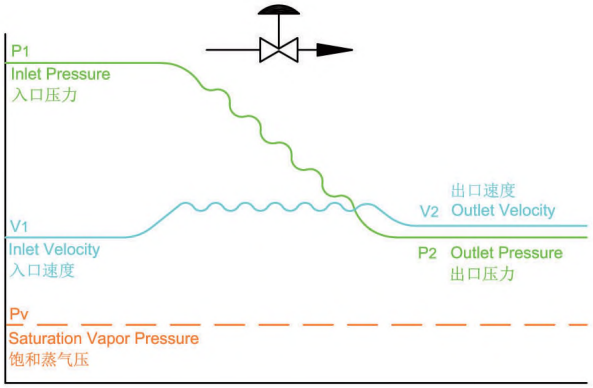

Profile through Valve for Labyrinth Cage Trim

迷宫式套筒导向型调节阀

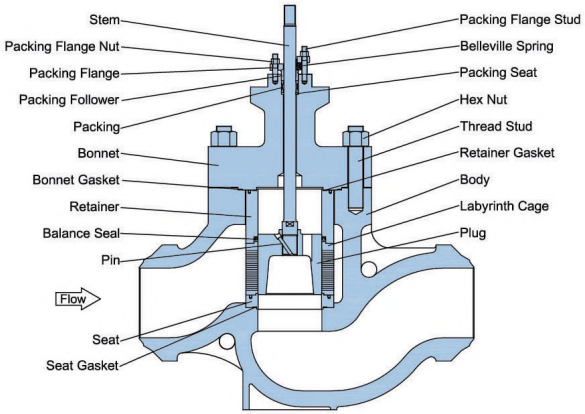

GC300 Parts List

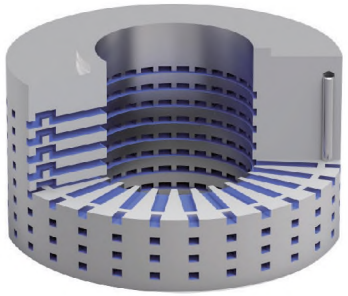

GC300 Labyrinth Cage with Large Path

规格

本体型式		GC300: 球形阀		AC300: 角阀
阀门口径		1"~32"	1"~24"	1"~18"
压力等级		ANSI 150#~600#	ANSI 900#~1500#	ANSI 2500#
连接方式		法兰式（RF, RTJ, FM）、焊接式（SW, BW）、内部法兰式、其他		
流体温度		-196~+565℃		
阀体材质		WCB/A105, WC6/F11, WC9/F22, LCB/LF2, CF8/F304, CF8M/F316, CF3/F304L, CF3M/F316L, Duplex, Monel, Hastelloy, Inconel, Titanium, etc…		
阀内件材质		A182-F6a, A182-F316, A564-630, F11/Stellited, Duplex, Monel, Hastelloy, Inconel, Titanium, etc…		
流量特性		线性、改良线性、改良等百分比		
可调比		20:1~50:1		
阀座泄漏量	金属阀座	ANSI Class Ⅳ, Ⅴ or MSS-SP-61		
	软阀座	ANSI Class Ⅵ		
标配执行机构		D100LA: 多弹簧薄膜式执行机构 P100LA: 活塞式气缸执行机构		

LABYRINTH CAGE GUIDED GLOBE VALVES

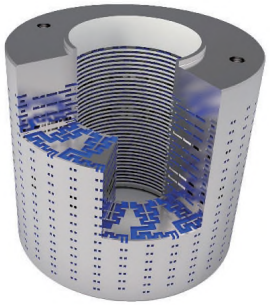

Labyrinth Cage

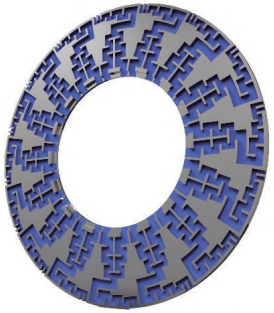

Disc of Labyrinth Cage after EDM

Specifications

Body Styles		GC300: Globe Valve		AC300: Angle Valve
Body Size		1"~32"	1"~24"	1"~18"
Body Rating		ANSI 150#~600#	ANSI 900#~1500#	ANSI 2500#
Connections		Flanges, Butt Weld, Socket Weld, Integral Flanges, etc…		
Fluid Temperature		-196~+565℃		
Body Material		WCB/A105, WC6/F11, WC9/F22, LCB/LF2, CF8/F304, CF8M/F316, CF3/F304L, CF3M/F316L, Duplex, Monel, Hastelloy, Inconel, Titanium, etc…		
Trim Material		A182-F6a, A182-F316, A564-630, F11/Stellited, Duplex, Monel, Hastelloy, Inconel, Titanium, etc…		
Flow Characteristics		Linear, Modified Linear, Modified EQ%		
Rangeability		20:1~50:1		
Seat Leakage	Metal Seat	ANSI Class Ⅳ, Ⅴ or MSS-SP-61		
	Soft Seat	ANSI Class Ⅵ		
Actuator Combination		D100LA: Multi-spring Pneumatic Diaphragm Actuator P100LA: Pneumatic Piston Cylinder Actuator		

多段式阀芯套筒导向型调节阀

GC400：多段式阀芯型直通调节阀

AC400：多段式阀芯型角阀

SCORE的GC400、AC400系列多段式阀芯型调节阀是专门为非洁净的高压差流体设计的，采用和迷宫阀一样的多级降压原理，只是流道为可变大流道，当流体中有颗粒物等杂质时，可以确保能通过曲折的流道。

因流道为非直角变向，降压效果比迷宫阀稍差，仅流体中含有颗粒杂质时推荐使用。

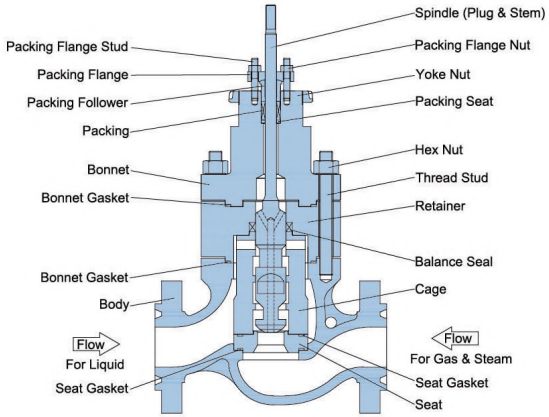

GC400 Parts List

Multi-step Plug

Multi-step Cage

规格

本体型式		GC400: 球形阀		AC400: 角阀
阀门口径		1"~32"	1"~24"	1"~18"
压力等级		ANSI 150#~600#	ANSI 900#~1500#	ANSI 2500#
连接方式		法兰式（RF, RTJ, FM）、焊接式（SW, BW）、内部法兰式、其他		
流体温度		-196~+565℃		
阀体材质		WCB/A105, WC6/F11, WC9/F22, LCB/LF2, CF8/F304, CF8M/F316, CF3/F304L, CF3M/F316L, Duplex, Monel, Hastelloy, Inconel, Titanium, etc…		
阀内件材质		A182-F6a, A182-F316, A564-630, F11/Stellited, Duplex, Monel, Hastelloy, Inconel, Titanium, etc…		
流量特性		线性、改良线性		
可调比		30:1~50:1		
阀座泄漏量	金属阀座	ANSI Class Ⅳ, Ⅴ or MSS-SP-61		
	软阀座	ANSI Class Ⅵ		
标配执行机构		D100LA: 多弹簧薄膜式执行机构 P100LA: 活塞式气缸执行机构		

Multi-step Plug Cage Guided GLOBE VALVES

GC400: Multi-step Plug Cage Guided Globe Valve

AC400: Multi-step Plug Cage Guided Angle Valve

Regulating valve with multi-step plug of series GC400 and AC400 of SCORE is specially designed for liquid with high pressure drop. This kind of valve adopts the same multi-stage pressure reducing principles with the labyrinth cage valve. Yet the flow channel is the adjustable large flow path which ensures smooth flow through the bending path if particles and impurities contained in the fluid.

The flow channel is not of right angle turning, thus the velocity control is not as good as labyrinth cage valve. Therefore this valve is recommended when only particles contained in the flow.

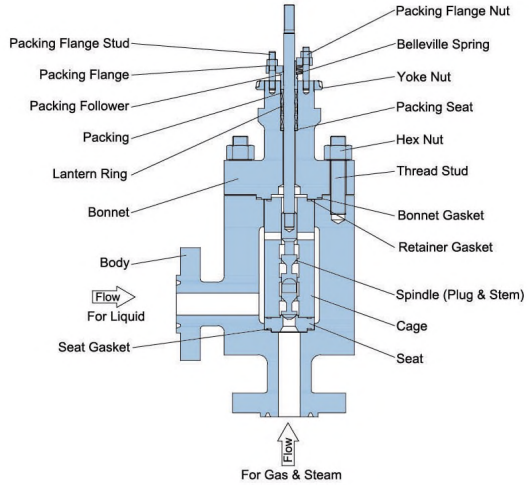

GC400 Parts List

Multi-step Plug

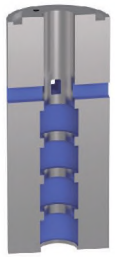

Multi-step Cage

Specifications

Body Styles		GC400: Globe Valve		AC400: Angle Valve
Body Size		1"~32"	1"~24"	1"~18"
Body Rating		ANSI 150#~600#	ANSI 900#~1500#	ANSI 2500#
Connections		Flanges, Butt Weld, Socket Weld, Integral Flanges, etc…		
Fluid Temperature		-196~+565℃		
Body Material		WCB/A105, WC6/F11, WC9/F22, LCB/LF2, CF8/F304, CF8M/F316, CF3/F304L, CF3M/F316L, Duplex, Monel, Hastelloy, Inconel, Titanium, etc…		
Trim Material		A182-F6a, A182-F316, A564-630, F11/Stellited, Duplex, Monel, Hastelloy, Inconel, Titanium, etc…		
Flow Characteristics		Linear, Modified Linear		
Rangeability		30:1~50:1		
Seat Leakage	Metal Seat	ANSI Class Ⅳ, Ⅴ or MSS-SP-61		
	Soft Seat	ANSI Class Ⅵ		
Actuator Combination		D100LA: Multi-spring Pneumatic Diaphragm Actuator P100LA: Pneumatic Piston Cylinder Actuator		

三通调节阀

GT100：三通分流调节阀

GT200：三通合流调节阀

GT100、GT200是套筒导向结构的三通阀，结构简单，阀芯和套筒不易卡阻，可以用于高温、高压的场合。
非平衡型阀芯结构，主要用于三通合流或者分流调节场合，无法承受太高的关闭压差。
GT100、GT200只是流向不同，三通分流阀GT100更换流向即可用于三通合流GT200的场合。

GT100-P100LA

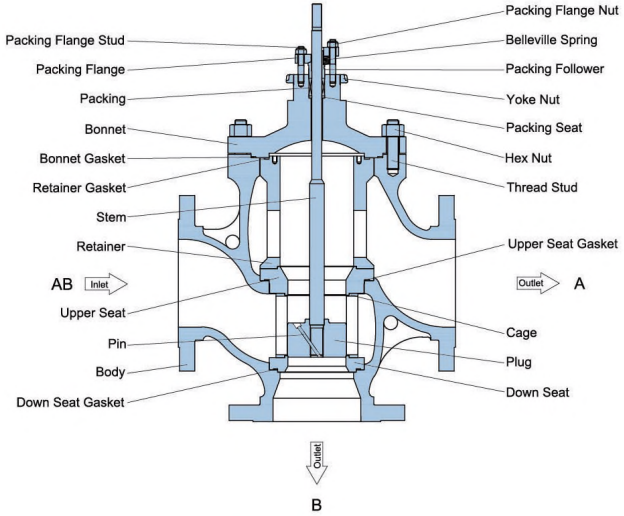

GT100 Parts List

规格

本体型式		GT100: 三通分流型		GT200: 三通合流型
阀门口径		1"~24"	1"~18"	1"~16"
压力等级		ANSI 150#~600#	ANSI 900#~1500#	ANSI 2500#
连接方式		法兰式（RF, RTJ, FM）、焊接式（SW, BW）、内部法兰式、其他		
流体温度		-196~+565℃		
阀体材质		WCB, WC6, WC9, LCB, CF8, CF8M, CF3, CF3M, Duplex, Monel, Hastelloy, Inconel, Titanium, etc…		
阀内件材质		A182-F6a, A182-F316, A564-630, F11/Stellited, Duplex, Monel, Hastelloy, Inconel, Titanium, etc…		
流量特性		线性、等百分比		
可调比		50:1		
阀座泄漏量	金属阀座	ANSI Class Ⅳ, Ⅴ		
	软阀座	ANSI Class Ⅵ		
标配执行机构		D100LA: 多弹簧薄膜式执行机构 P100LA: 活塞式气缸执行机构		

THREE WAY GLOBE VALVES

GT100：3-ways Diverting Globe Valves

GT200：3-ways Mixing Globe Valves

GT100 and GT200 there-way cage guided globe valve are of simple structure. The valve plug and cage are not tend to be blocked which can be used under high temperature and pressure.
The unbalanced valves are mainly used for general flow mixing and diverting service, which cannot bear too high shut-off pressure.
GT100 and GT200 are of different flow direction only. Simply changing the flow direction of diverging valve, GT100 can be used for mixing service as GT200.

GT200-D100LA

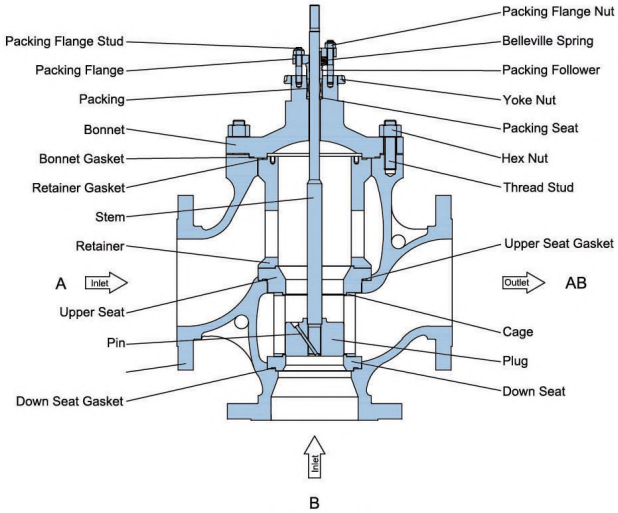

GT200 Parts List

Specifications

Body Styles		GT100: Diverting Type		GT200: Mixing Type
Body Size		1"~24"	1"~18"	1"~16"
Body Rating		ANSI 150#~600#	ANSI 900#~1500#	ANSI 2500#
Connections		Flanges, Butt Weld, Socket Weld, Integral Flanges, etc…		
Fluid Temperature		-196~+565℃		
Body Material		WCB, WC6, WC9, LCB, CF8, CF8M, CF3, CF3M, Duplex, Monel, Hastelloy, Inconel, Titanium, etc…		
Trim Material		A182-F6a, A182-F316, A564-630, F11/Stellited, Duplex, Monel, Hastelloy, Inconel, Titanium, etc…		
Flow Characteristics		Linear, EQ%		
Rangeability		50:1		
Seat Leakage	Metal Seat	ANSI Class Ⅳ, Ⅴ		
	Soft Seat	ANSI Class Ⅵ		
Actuator Combination		D100LA: Multi-spring Pneumatic Diaphragm Actuator P100LA: Pneumatic Piston Cylinder Actuator		

闸阀

PG100：平行闸阀

PG100系列双闸板平行闸阀采用金属接触式密封，动作可靠，全开时直通式的流道几乎没有压力损失，广泛应用于高温、高压乃至低温条件下的紧急切断阀、放空阀，特别适合于作为大口径的切断阀。

金属接触式的阀板、阀座密封副本身具有阀座防火功能，一般适合安装于水平管道。

PG100-P100LA SR

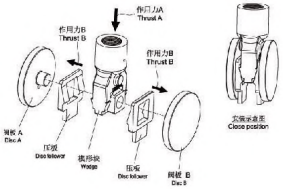

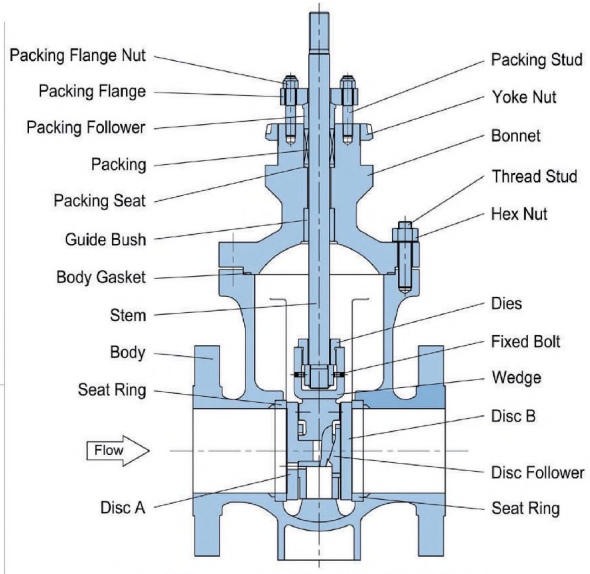

Parts List for ANSI 150#~300#/PN16~PN50、ANSI 600#~2500#/PN63~PN400@1-1/2”~4

规格

阀门口径	1.5”~36”	1.5”~32”	1.5”~24”
压力等级	ANSI 150#~300#	ANSI 600#	ANSI 900#~2500#
连接方式	法兰式（RF, RTJ, FM）、焊接式（SW, BW）、内部法兰式、其他		
流体温度	-196~+565℃		
阀板材质	WCB, WC6, WC9, LCB, CF8, CF8M, CF3, CF3M, Duplex, Monel, Hastelloy, Inconel, Titanium等		
阀板、阀座材质	A182-F6a, A182-F316, A182-F11, Duplex, Monel, Hastelloy, Inconel, Titanium等		
阀板、阀座处理	堆焊司泰莱合金No.12, 6		
碟形弹簧	17-7PH, INCONEL 718		
流量特性	开关		
阀座泄漏量	ANSI Class Ⅴ, Ⅵ		
标配执行机构	D100LA	多弹簧薄膜式执行机构	
	P100LA	活塞式气缸执行机构	
	P300LA		

GATE VALVES

PG100: Parallel Slide Gate Valves

PG100 parallel slide gate valves with double disc shown in figures 1 have the construction to achieve superior metal-to-metal sealing performance. The excellent shut-off performance brought about by the metal touch sealing and very less pressure drop at full opening makes it well-suited to a variety of severe service, including emergency shut-off and vent from extremely high temperature and high pressure to cryogenic applications. Especially suitable for big size shut-off.

Metal touch construction automatically assure fire-safe function as well, usually be installed in horizontal pipeline.

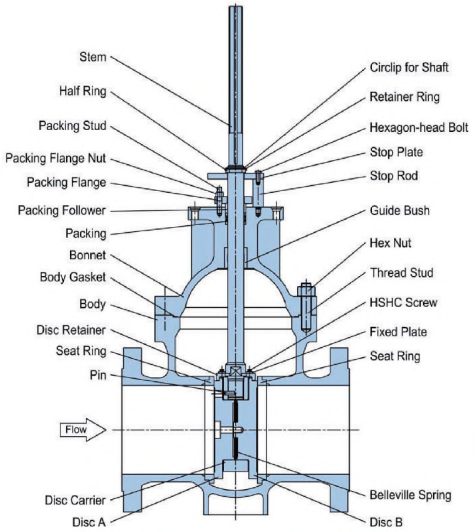

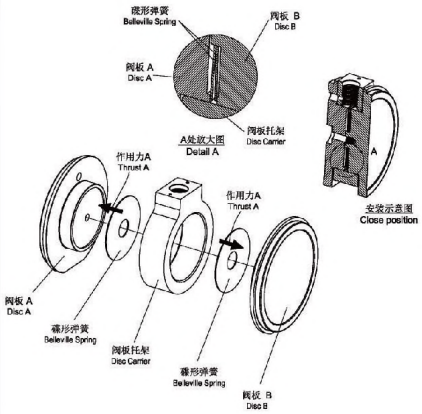

Body Parts List for ANSI 600#~2500# PN63~PN400 1.5”~36”

Specifications

Body Size	1.5”~36”	1.5”~32”	1.5”~24”
Body Rating	ANSI 150#~300#	ANSI 600#	ANSI 900#~2500#
Connections	Flanges, Butt Weld, Socket Weld, Integral Flanges, etc···		
Fluid Temperature	-196~+565℃		
Body Material	WCB, WC6, WC9, LCB, CF8, CF8M, CF3, CF3M, Duplex, Monel, Hastelloy, Inconel, Titanium, etc···		
Disc & Seat Ring Mtl	A182-F6a, A182-F316, A564-630, F11/Stellited, Duplex, Monel, Hastelloy, Inconel, Titanium, etc···		
Disc & Seat Ring Treatment	Surfacing Stellite No.12,6		
Belleville Spring	17-7PH, INCONEL 718		
Flow Characteristics	On-off		
Seat Leakage	ANSI Class Ⅴ, Ⅵ		
Actuator Combination	D100LA	Multi-spring Pneumatic Diaphragm Actuator	
	P100LA	Pneumatic Piston Cylinder Actuator	
	P300LA		

部分球面球阀

BV100/BV120/BV130：V型球阀

BV100、BV120、BV130系列V型阀为部分球面球阀，带V型切口的球面阀板在增大调节比的同时，在关闭时和阀座还有剪切作用，因此适用于大可调比的控制，以及高粘度流体、含聚合物、纤维质、料浆类流体、含固体颗粒杂质的流体的控制。

BV100是对夹式（带定位支耳），BV120是长法兰式、BV130是短法兰式。

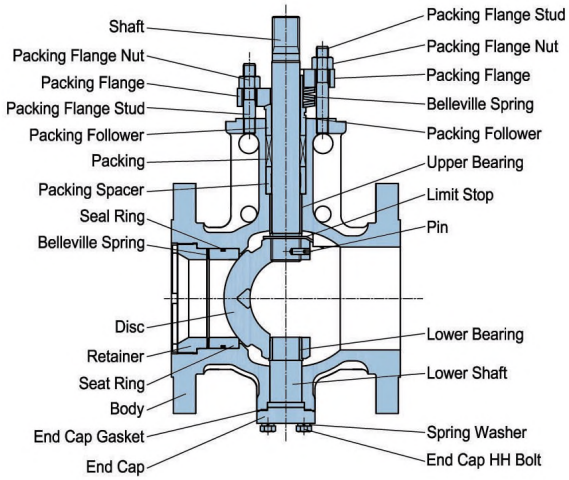

BV100 Parts List

规格

本体型式		BV100	BV120/BV130
连接方式		对夹式	法兰式
阀门口径		1”~18”	1”~18”
压力等级		ANSI 150#~600#	
法兰距		ISA S75.04	ANSI B16.10/ISA S75.04
流体温度		-45~+600 ℃	
阀体材质		WCB, WC6, WC9, LCB, CF8, CF8M, CF3, CF3M, Duplex, Monel, Hastelloy, Inconel, Titanium等（内腔可喷涂碳化钨）	
阀板材质		CF8M, CF3, CF3M, Duplex, Monel, Hastelloy, Inconel, Titanium等	
阀板		镀硬铬、堆焊司泰莱合金、喷涂碳化钨、整体碳化钨	
流量特性		近似等百分比	
可调比		2-1/2″及以下200:1，3″及以上400:1	
阀座材质		强化聚四氟乙烯，A276-316/堆焊司太莱合金， A276-410/喷涂碳化钨，A276-316/喷涂碳化钨，整体碳化钨	
阀座泄漏量	金属阀座	ANSI Class Ⅳ，Ⅴ	
	软阀座	ANSI Class Ⅵ	
标配执行机构		P100RA	活塞式气缸执行机构
		P200RA	

SEGMENTAL BALL VALVES

BV100/BV120/BV130: Concentric Type V-notch Ball Valves

BV100 and BV120/BV130 series concentric type V-notch ball valves are segmented ball valve, V-notch cut at disc makes rangeability larger and creates shearing effect by disc and seat ring.Therefore, suitable to large rangeability service and/or control of fluids with high viscosity or slurry, fiber and solid particles.
BV100 is of wafer type (with lugs hole) , BV120 is of longe flange type and BV130 is of short flange type.

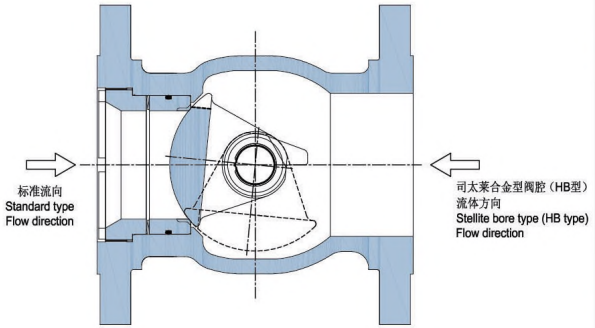

Conccentric Plug

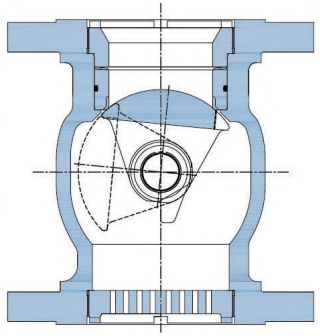

BV100 with Differential Velocity Device

Specifications

Body Styles		BV100	BV120/BV130
Connections		Wafer Type	Flanged (RF) Type
Body Size		1”~18”	1”~18”
Body Rating		ANSI 150#~600#	
Face to Face		ISA S75.04	ANSI B16.10/ISA S75.04
Fluid Temperature		-45~+600℃	
Body Material		WCB, WC6, WC9, LCB, CF8, CF8M, CF3, CF3M, Duplex, Monel, Hastelloy, Inconel, Titanium, etc… (Tungsten Carbide Coated inside is available)	
Disc Material		CF8M, CF3, CF3M, Duplex, Monel, Hastelloy, Inconel, Titanium, etc…	
Disc Treatment		Hard Chrome Plated, Stellited, Tungsten Carbide Coated, Full Tungsten Carbide	
Flow Characteristics		Approximate EQ%	
Rangeability		2-1/2″and under: 200:1, 3″and over: 400:1	
Seat Material		Reinforced Teflon, A276-316/Stellite N0.6, A276-410/Tungsten Carbide Coated, A276-316/Tungsten Carbide Coated, Full Tungsten Carbide	
Seat Leakage	Metal Seat	ANSI Class Ⅳ，Ⅴ	
	Soft Seat	ANSI Class Ⅵ	
Actuator Combination		P100RA	Pneumatic Cylinder Actuator
		P200RA	

凸轮挠曲阀

BE100/BE120/BE130：凸轮挠曲阀

BE100、BE120、BE130系列凸轮挠曲阀为部分球面球阀，因此兼有球阀的一些特质，与球形阀相比，具有体积小、重量轻、容量大、可调比大等特点。是低压差、大流量流体比较经济的调节阀，适合于高粘度流体、含聚合物、纤维质、固体颗粒杂质的流体的控制。

BE100是对夹式（带定位支耳），BE120是长法兰式，BE130是短法兰式。

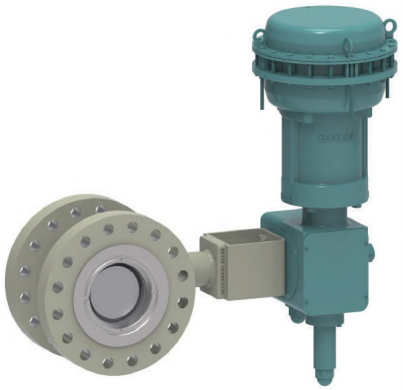

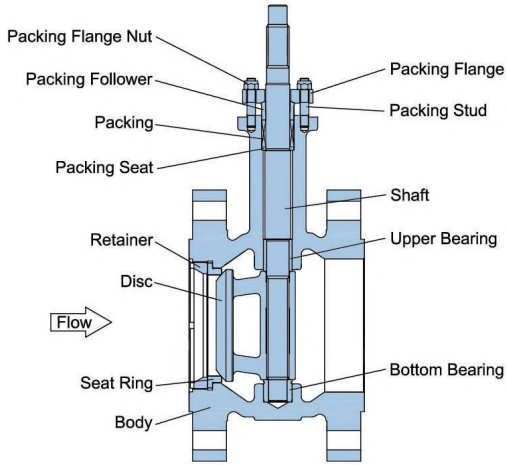

BE120 Parts List

规格

本体型式		BE100	BE120/BE130
连接方式		对夹式	法兰式
阀门口径		1”~18”	1”~18”
压力等级		ANSI 150#~600#	
法兰距		ISA S75.04	ANSI B16.10/ISA S75.04
流体温度		-45~+600 ℃	
阀体材质		WCB, WC6, WC9, LCB, CF8, CF8M, CF3, CF3M, Duplex, Monel, Hastelloy, Inconel, Titanium等（可喷涂碳化钨）	
阀板材质		CF8M, CF3, CF3M, Duplex, Monel, Hastelloy, Inconel, Titanium, 碳化钨等	
阀板处理		镀硬铬，堆焊司泰莱合金，喷涂碳化钨	
流量特性		近似线性	
可调比		全腔型 100:1；缩腔型 15:1~50:1	
阀座材质		强化聚四氟乙烯，A564-630/析出硬化热处理，A276-316/堆焊司太莱合金，A564-630/喷涂碳化钨，A276-316/喷涂碳化钨，整体碳化钨	
阀座泄漏量	金属阀座	ANSI Class Ⅳ	
	软阀座	ANSI Class Ⅵ	
标配执行机构		D100RA	多弹簧薄膜式执行机构
		P100RA	活塞式气缸执行机构
		P200RA	

SEGMENTAL BALL VALVES

BE100/BE120: Eccentric Rotating Plug Valves

BE100, BE120 and BE130 series camflex rotary plug valves are segmented ball valve, which also have some features of ball valves. Compared with globe valves, this kind of valve is of compact, large capacity and wide rangeability, etc. It is relatively economical for liquid with low pressure drop and large flow rate, and is applicable to control liquid with high viscosity or slurry, fiber and solid particles.
BE100 is of wafer type (with lugs hole), BE120 is of long flange type and BE130 is of short flange type.

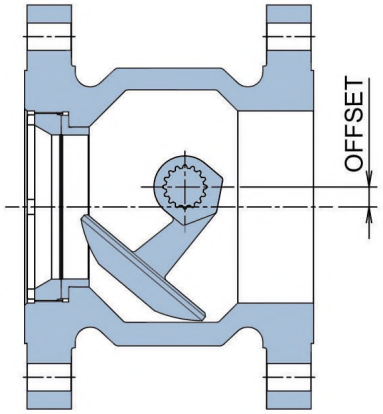

Eccentric Plug

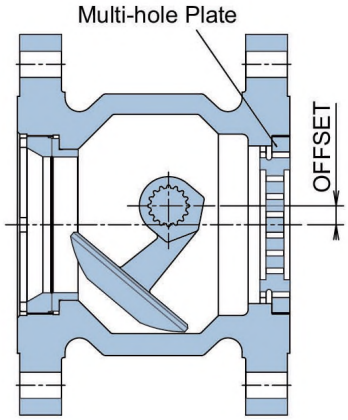

BE120 with Differential Velocity Device

Specifications

Body Styles		BE100	BE120/BE130
Connections		Wafer Type	Flanged (RF) Type
Body Size		1”~18”	1”~18”
Body Rating		ANSI 150#~600#	
Face to Face		ISA S75.04	ANSI B16.10/ISA S75.04
Fluid Temperature		-45~+600℃	
Body Material		WCB, WC6, WC9, LCB, CF8, CF8M, CF3, CF3M, Duplex, Monel, Hastelloy, Inconel, Titanium, etc…(Tungsten Carbide Coated inside is available)	
Disc Material		CF8M, CF3, CF3M, Duplex, Monel, Hastelloy, Inconel, Titanium, etc…	
Disc Treatment		Hard Chrome Plated, Stellited, Tungsten Carbide Coated, Full Tungsten Carbide	
Flow Characteristics		Approximate Linear	
Rangeability		Full Bore: 100:1, Reduced Bore: 15:1~50:1	
Seat Material		Reinforced Teflon, A564-630/PH, A276-316/Stellite N0.6, A564-630/Tungsten Carbide Coated, A276-316/Tungsten Carbide Coated, Full Tungsten Carbide	
Seat Leakage	Metal Seat	ANSI Class Ⅳ	
	Soft Seat	ANSI Class Ⅵ	
Actuator Combination		D100RA	Multi-spring Pneumatic Diaphragm Actuator
		P100RA	Pneumatic Cylinder Actuator
		P200RA	

球阀

BM100/BM200：金属密封球阀

BM100、BM120系列金属密封球阀在金属球体表面和阀座密封面采用超音速喷涂碳化钨或者碳化铬，采用热喷涂工艺在球体表面喷涂镍基合金、阀座密封面堆焊司太莱合金，对配合密封面进行硬度强化。采用特制的高速磨床、球面车床，磨削和车削球体及阀座，保证球体的球面度。最后采用SCORE特有的研磨设备和工艺对球体和阀座进行配合研磨，使其密封副完全密封，最高可以达到零泄漏。

经过配合研磨的球和阀座完全贴合形成无缝隙密封面，有效阻止杂质进入密封面之间，球体转动时，阀座密封面还能刮除黏附在球面上的异物，具备自清洁功能。适合于高温高压，含颗粒物、 粉体、纤维质及料浆类流体。

BM100是浮动球式，BM200是固定球式。

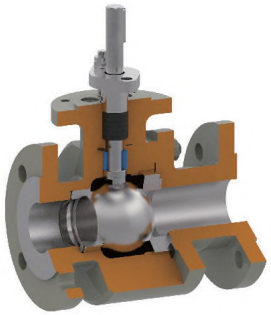

Floating Ball (1/2”~3”)

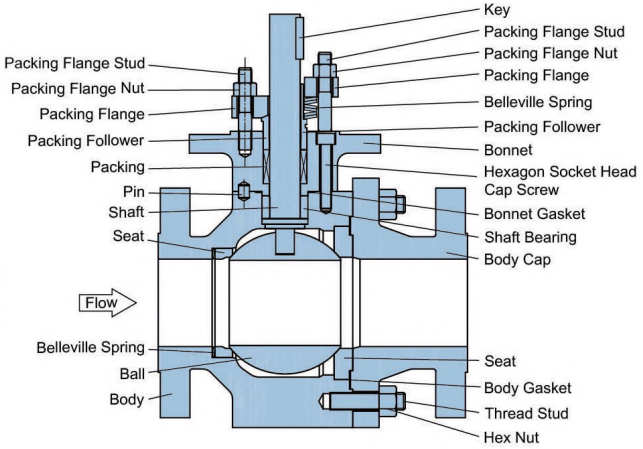

BM100 Parts List (1/2”~4” With Floating Ball)

规格

本体型式	BM100（浮动球阀）	BM200（固定球阀）
阀门口径	1/2”~4”	2”~32”
连接方式	法兰式 Flanged Type（RF、RTJ、FM）	
压力等级	ANSI 150#~600#, ANSI 900#~2500#	
流体温度	-45~+600℃	
阀体材质	WCB/A105, WC6/F11, WC9/F22, LCB/LF2, CF8/F304, CF8M/F316, CF3/F304L, CF3M/F316L, A995-4A/S31308等	
球体/阀座材质	A276-410, A276-316等	
球体处理	喷涂碳化钨、碳化铬，喷涂 Ni 基合金（Metco 16C）	
阀座处理	喷涂碳化钨、碳化铬，堆焊司太莱合金（Stellite No.12）	
阀座泄漏量	ANSI Class Ⅴ, Ⅵ, 零泄漏	
标配执行机构	P100RA	活塞式气缸执行机构
	P200RA	

BALL VALVES

BM100/BM200：Metal Seated Ball Valves

BM100 and BM120 series are metal seated ball valves, which adopt High Velocity Oxygen Fuel (HVOF) to coat tungsten carbide or chromium carbide on metal ball surface and valve seat sealing surface. Thermal spraying process is adopted for nickel base alloy spraying on ball surface and stellite-alloy surfacing on valve seat sealing surface. Hardness strengthening is done on the supporting sealing surface. Special high-speed grinding machine, spherical turning lathe, grinding and turning ball and valve seat is applied to ensure spherical degree of the ball. Finally special rubbing machine and process of SCORE is adopted to perform supporting rubbing of ball and valve seat in order to ensure complete sealing of the sealing pair. Zero-leakage can be achieved under best situation.

Ball and valve after supporting rubbing will completely attached to form seamless sealing surface which may prevent impurities from entering in an effective way. When the ball is rotating, the valve seat sealing surface may scrap impurities attached on the ball surface to realize self-cleaning function.

It is applicable for liquid with high temperature and pressure and containing particle, dust, fiber and slurry.

BM100 is of floating ball type and BM200 is of trunnion ball type.

Trunnion Ball

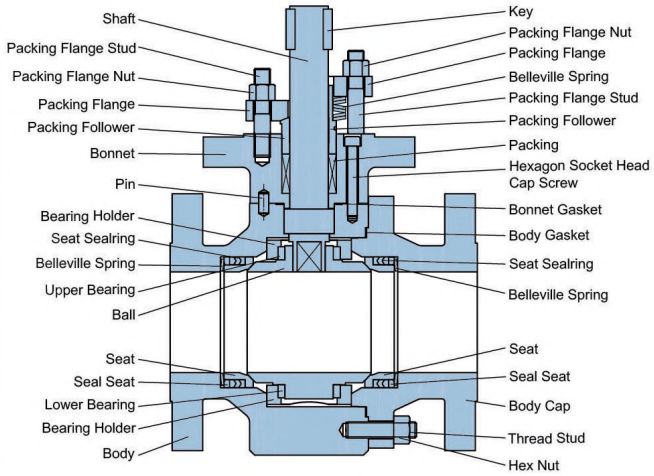

BM200 Parts List (2”~24” With Trunnion Ball)

Specifications

Body Styles	BM100 (Floating)	BM200 (Trunnion)
Body Size	1/2”~4”	2”~32”
Connections	Flanged Type (RF、RTJ、FM)	
Body Rating	ANSI 150#~600#, ANSI 900#~2500#	
Fluid Temperature	-45~+600℃	
Body Material	WCB/A105, WC6/F11, WC9/F22, LCB/LF2, CF8/F304, CF8M/F316, CF3/F304L, CF3M/F316L, A995-4A/S31308, etc…	
Ball/Seat Material	A276-410, A276-316, etc···	
Ball Treatment	Tungsten Carbide/Chrome Carbide Coated, Self-Fluxing Nickel–Based Alloy (Metco 16C)	
Seat Treatment	Tungsten Carbide/Chrome Carbide Coated, Stellited Hard Face (Stellite No.12)	
Seat Leakage	ANSI Class Ⅴ, Ⅵ, 0 Leakage	
Actuator Combination	P100RA	Pneumatic Piston Cylinder Actuator
	P200RA	

高性能蝶阀

BT300/BT320 三偏芯蝶阀

BT300、BT320系列三偏芯蝶阀具有阀杆中心线偏离密封面中心线（Offset1）、阀杆中心线偏离管道中心线（Offset2）、密封面的锥面轴线偏离管道中心线（Offset3），是真正意义上的三偏芯。有金属密封环、多层式密封环结构可选，适用于各种不同的工况，既可以用于低压差的调节场合，也适于开关和严密切断的控制。阀座泄漏量从Class Ⅳ到Class Ⅵ可以根据阀座结构选择。密封环安装于阀板上，更便于检修更换。

BT300是经济、轻便的对夹式蝶阀，BT320是双法兰式蝶阀。

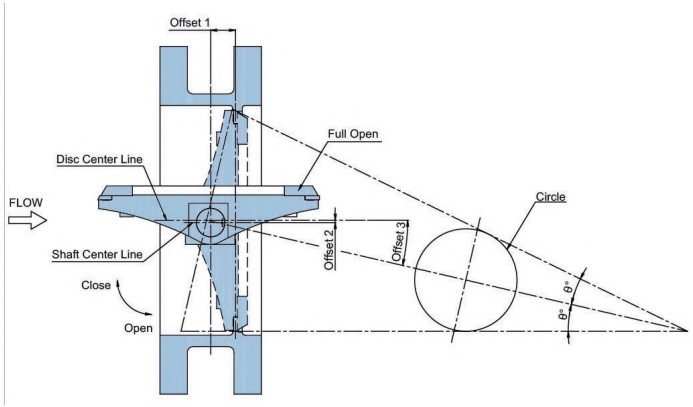

BT320-P100RA

HIGH PERFORMANCE BUTTERFLY VALVES

BT300/BT320 Triple-offset Butterfly Valves

BT300, BT320 triple-offset butterfly valves, shaft is offset behind the seal face axis (offset1) and shaft centerline is offset from the pipe centerline (offset2). The third offset is the seat cone axis is offset from the pipe centerline. It is true sense of the triple offset. Metal seal ring, laminated seal ring are optional. It is suitable for all kinds of different working conditions. It can be used for low pressure differential adjustment occasions, also suitable for switching and tight cut-off control. The triple-offset provides ANSI Class Ⅳ, Ⅴ, Ⅵ leakage performance. The seat seal ring can be changed easily from the disc.
BT300 is wafer type, BT320 is double flanged type.

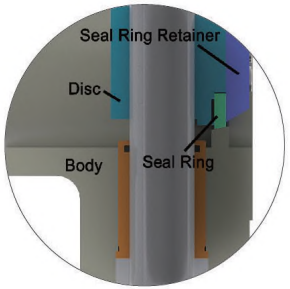

Seal Parts List

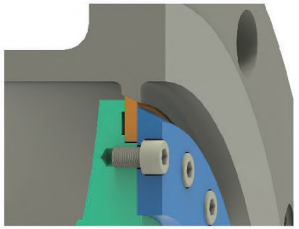

Solid Metal Seat

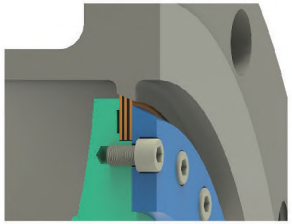

Laminated Seal Ring

规格

本体型式	BT300		BT320
连接方式	对夹式		双法兰式
阀门口径	3”~60”	3”~40”	4”~36”
压力等级	ANSI 150#~300#	ANSI 600#	ANSI 900#~2500#
流体温度	-196~+650℃		
阀体材质	WCB, WC6, WC9, LCB, CF8, CF8M, CF3, CF3M, A995-4A等		
阀体处理	堆焊司太莱合金No.21及其他		
阀板材质	WC6, WC9, LCB, CF8, CF8M, CF3, CF3M, A995-4A等		
流量特性	近似等百分比（固有特性）		
可调比	70°开度 50:1，90°开度 100:1		
密封环材质	纯金属		多层式阀座
	A564-630/PH UNS S31803 UNS S20910 Inconel 718		UNS S31803+柔性石墨 316L+柔性石墨 Inconel 718+柔性石墨
阀座泄漏量	ANSI Class Ⅳ, Ⅴ, Ⅵ		ANSI Class Ⅴ, Ⅵ
标配执行机构	D100RA	多弹簧薄膜式执行机构	
	P100RA	活塞式气缸执行机构	
	P200RA		

Specifications

Body Styles	BT300		BT320
Connections	Wafer Type		Double Flanged Type
Body Size	3”~60”	3”~40”	4”~36”
Body Rating	ANSI 150#~300#	ANSI 600#	ANSI 900#~2500#
Fluid Temperature	-196~+650℃		
Body Material	WCB, WC6, WC9, LCB, CF8, CF8M, CF3, CF3M, A995-4A, etc…		
Body Treatment	Seal surface Stellited No.21 or others		
Disc Material	WC6, WC9, LCB, CF8, CF8M, CF3, CF3M, A995-4A, etc…		
Flow Characteristics	Approximate EQ% (Inherent Characteristic)		
Rangeability	70°Opening/50:1, 90°Opening/100:1		
Seat Material	Solid Metal Seat		Laminated Seat
	A564-630/PH UNS S31803 UNS S20910 Inconel 718		UNS S31803+Graphite 316L+Graphite Inconel 718+Graphite
Seat Leakage	ANSI Class Ⅳ, Ⅴ, Ⅵ		ANSI Class Ⅴ, Ⅵ
Actuator Combination	D100RA	Multi-spring Pneumatic Diaphragm Actuator	
	P100RA	Pneumatic Piston Cylinder Actuator	
	P200RA		

BT300/BT320本体部结构图

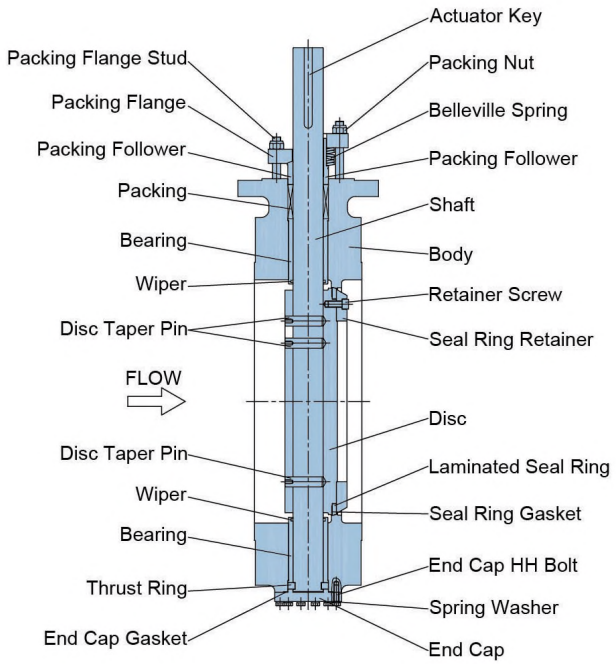

BT320 Parts List

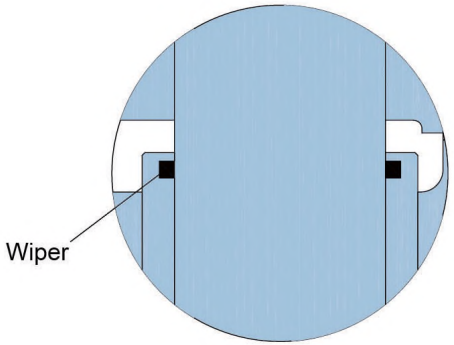

Wiper Detail

BT300/BT320 Body Assembly Construction

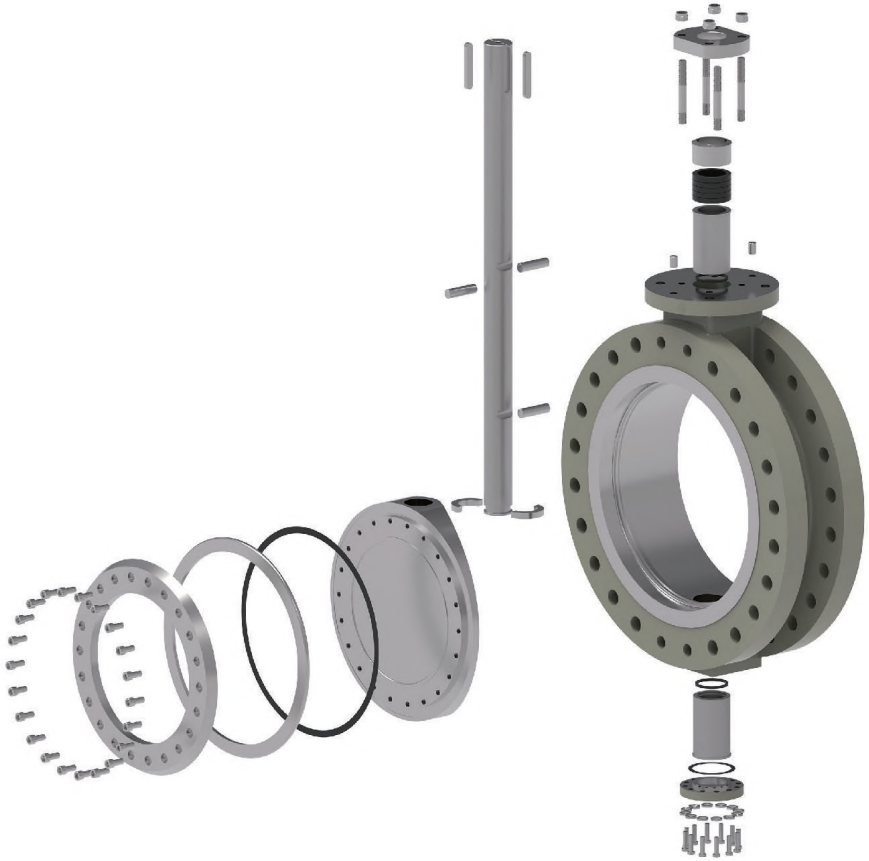

Metal Seal Ring

Lamianted Seal Ring

高性能蝶阀

BT200/BT220 双偏芯蝶阀

BT200/BT220系列双偏芯蝶阀具有阀板面偏离轴平面（offset1）、阀体和阀板的几何中心偏离阀板回转中心（offset2）的双重偏芯。独特的阀板和阀座的软密封设计结构，具有优良的切断性能和耐久性。阀座安装于阀体上，更便于检修更换。

BT200是经济、轻便的对夹式蝶阀，BT220是法兰式。

BT200-P100RA

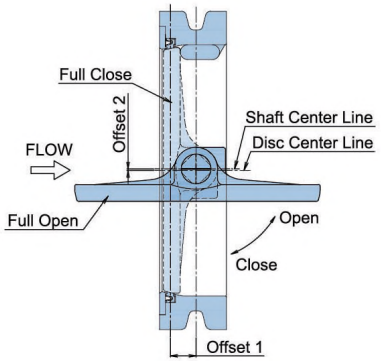

Double-offset Construction

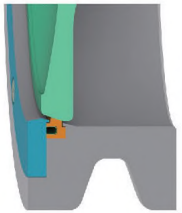

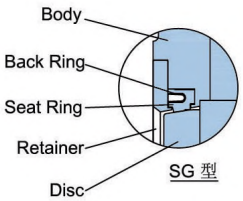

SG Type Seat

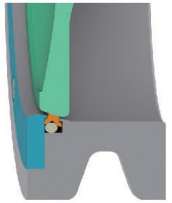

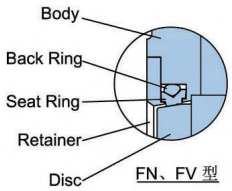

FN/FV Type Seat

规格

本体型式	BT200		BT220
连接方式	对夹式		双法兰式
阀门口径	3”~60”		
压力等级	ANSI 150#~300#		
阀体材质	WCB, CF8, CF8M, CF3, CF3M等		
阀板材质	WCB, CF8, CF8M, CF3, CF3M等		
阀板处理	镀硬铬或者抛光		
流量特性	近似等百分比（固有特性）		
可调比	70°开度 50:1，90°开度 100:1		
流体温度	-45~+250℃	-45~+60℃	-10~+180℃
阀座型式	SG 型	FN	FV
密封环材质	强化聚四氟乙烯	强化聚四氟乙烯	强化聚四氟乙烯
垫环材质	A276-316	NBR	VITON
阀座泄漏量	ANSI Class Ⅵ		
标配执行机构	D100RA	多弹簧薄膜式执行机构	
	P100RA	活塞式气缸执行机构	
	P200RA		

HIGH PERFORMANCE BUTTERFLY VALVES

BT200/BT220 Double-offset Butterfly Valves

BT200/BT220 double-offset butterfly valves, shaft offsets are created by designing the valve with the shaft located behind the centerline of the sealing surface (offset1) and slightly to one side of the pipe centerline (offset2). These double offset offer unique soft seal construction between disc and seat to get high seal performance and high durability. The seat in the body can be changed easily from the body.
BT200 is wafer type, economical and compact, BT220 is of flange type.

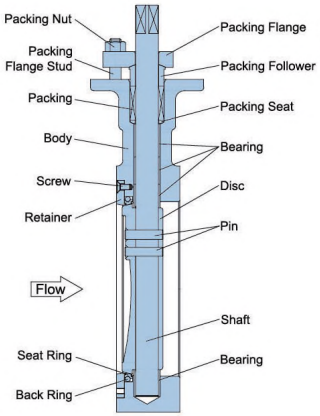

BT200 Parts List (3”~8”)

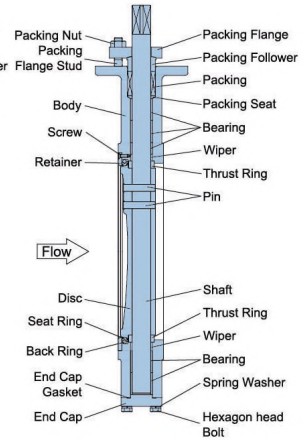

BT200 Parts List (10”~16”)

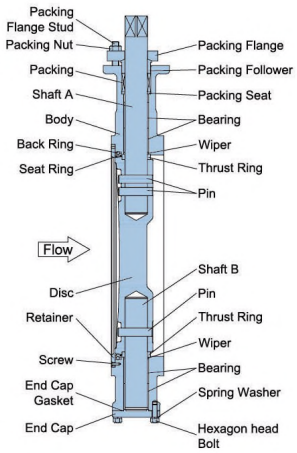

BT200 Parts List (18”~60”)

Specifications

Body Styles	BT200		BT220
Connections	Wafer Type		Double Flanged Type
Body Size	3”~60”		
Body Rating	ANSI 150#~300#		
Body Material	WCB, CF8, CF8M, CF3, CF3M, etc…		
Disc Material	WCB, CF8, CF8M, CF3, CF3M, etc…		
Disc Treatment	Hard Chrome Plated or Buffing		
Flow Characteristics	Approximate EQ% (Inherent Characteristic)		
Rangeability	70°Opening/50:1, 90°Opening/100:1		
Fluid Temperature	-45~+250℃	-45~+60℃	-10~+180℃
Seat Type	SG	FN	FV
Seal Ring Material	Reinforced Teflon	Reinforced Teflon	Reinforced Teflon
Back Ring Material	A276-316	NBR	VITON
Seat Leakage	ANSI Class Ⅵ		
Actuator Combination	D100RA	Multi-spring Pneumatic Diaphragm Actuator	
	P100RA	Pneumatic Piston Cylinder Actuator	
	P200RA		

普通蝶阀

BT600 低负载型蝶阀

BT600系列低负载型蝶阀是钣金结构的低压蝶阀，专用于低压气体的控制，可用于高温气体的开关和调节控制，是一种低成本的大口径、低压气体控制阀。

有三种阀座型式可选，适合于不同的流体温度和泄漏要求。

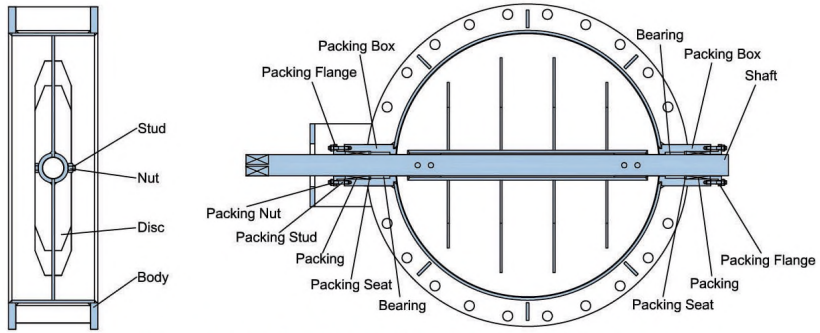

Inner Bearing Type (for small size and normal temperature)

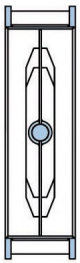

Damper Type Disc

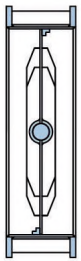

Back Seat Type Disc

规格

本体型式		BT600	
连接方式		法兰式（FF, RF）、焊接式（BW）	
阀门口径		3”~128” (DN80~DN3200)	
压力等级		ANSI 125#, JB/HG PN0.25MPa	
流体温度		-45~+650℃	
阀体材质		Q235B, A240-304, A240-304L, A240-316, A240-316L, etc…	
阀板材质		Q235B, A240-304, A240-304L, A240-316, A240-316L, etc…	
流量特性		近似等百分比	
可调比		70°开度 30:1，90°开度50:1	
阀座泄漏量	开放型	90°Cv x 2.0~1.0%	
	15° 密封型	90° Cv x 0.5~0.2%	
	后座型	90° Cv x 0.3~0.1%	
标配执行机构		D100RA	多弹簧薄膜式执行机构
		P100RA	活塞式气缸执行机构
		P200RA	

CONVENTIONAL BUTTERFLY VALVES

BT600 Light Duty Damper Type Butterfly Valves

Light-duty butterfly valve of series BT600 is low-pressure butterfly valve with steel plate structure which is specially designed for low pressure gas control. It also can be used for on-off and modulating control of high-temperature gas which is a kind of big capacity and low pressure gas control valve with low cost.
There are three kinds of vale seat for you to choose to meet different temperature and leakage requirements of the fluid.

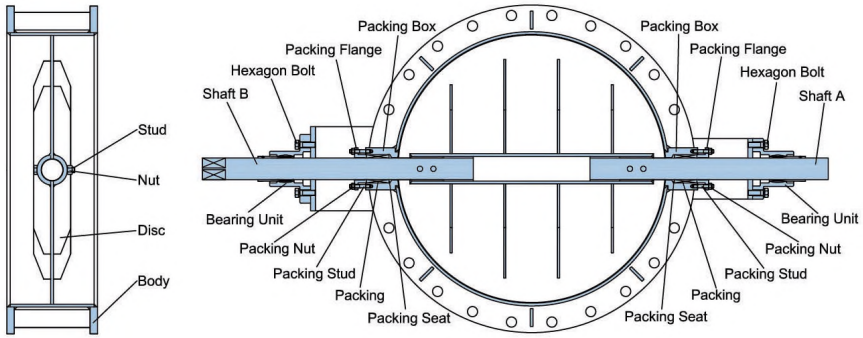

Out Bearing Type (for large size and high temperature)

Specifications

Body Styles		BT600	
Connections		Flanged (FF, RF) Type, Butt Weld (BW)	
Body Size		3”~128” (DN80~DN3200)	
Body Rating		ANSI 125#, JB/HG PN0.25MPa	
Fluid Temperature		-45~+650℃	
Body Material		Q235B, A240-304, A240-304L, A240-316, A240-316L, etc…	
Disc Material		Q235B, A240-304, A240-304L, A240-316, A240-316L, etc…	
Flow Characteristics		Approximate EQ% (Inherent Characteristic)	
Rangeability		70°Opening/30:1, 90°Opening/50:1	
Seat Leakage	Damper	90°Cv x 2.0~1.0%	
	15° Seal	90° Cv x 0.5~0.2%	
	Back Ring	90° Cv x 0.3~0.1%	
Actuator Combination		D100RA	Multi-spring Pneumatic Diaphragm Actuator
		P100RA	Pneumatic Piston Cylinder Actuator
		P200RA	

执行机构

D100L系列气动薄膜式执行机构

该系列采用多弹簧结构，是体积小、重量轻、性能高、输出力大的气动薄膜式执行机构。其工作原理为：由调节器来的电或气信号经定位器转换成的气压输入到膜室里，作用于膜片上产生推力，使推杆移动，同时压缩弹簧直到和弹簧的反作用力平衡，使推杆到达预定的位置。

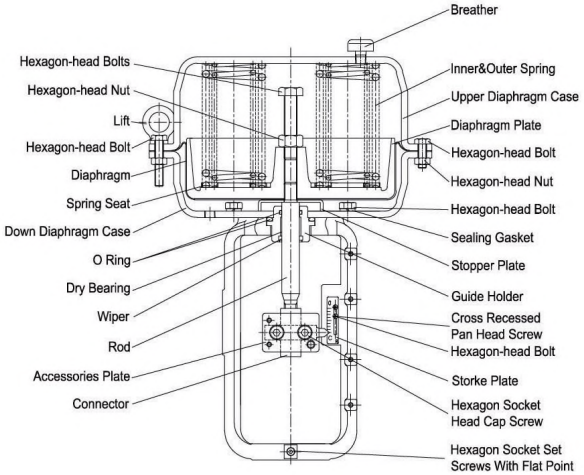

D100L without Manual Handwheel

D100L规格

型式	直行程					
	D122LC	D127LC	D135LC	D14SLC D14LLC	D15SLA D15LLA	D16SLB D16LLB
执行机构尺寸	220	270	350	450	550	650
执行机构有效面积 (cm^2)	188.82	314.33	555.88	956.83	1,548.82	2,236.31
气源压力及弹簧范围 (KPa)	300/80~200, 340/120~300, 400/120~280					
最大输出力 (N)	2,266	3,772	6,671	11,482	18,586	26,836
最大行程 (mm)	20	30	40	90	110	110
动作方式	正作用（DA）、反作用（RA）					
允许环境温度	标准型：-20~+70℃，低温型-50+40℃，高温型：0~+100℃					
选购设备	手轮机构、限位开关、定位器、过滤减压阀、电磁阀等					

ACTUATORS

D100L Pneumatic Diaphragm

Pneumatic diaphragm actuator of this series adopts multi-spring structure with compact, high performance and big thrust. The working principles are as follows: electricity or pneumatic signal from controller will enter the diaphragm room after converted into air pressure by positioner to form push force to act on the diagram and make the push rod move. Meanwhile the spring is compressed until the acting force is balanced with counter-acting force to make the push rod reach preset position.

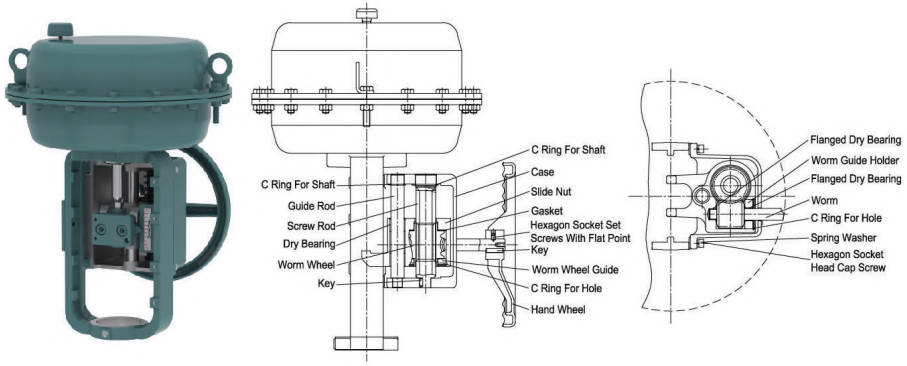

D100L with Manual Handwheel

D100LSpecifications

Type	Linear Stem Motion Type					
	D122LC	D127LC	D135LC	D14SLC D14LLC	D15SLA D15LLA	D16SLB D16LLB
Actuator Size	220	270	350	450	550	650
Nominal Diaphragm Area (cm^2)	188.82	314.33	555.88	956.83	1,548.82	2,236.31
Air Supply /Spring Range (KPa)	300/80~200, 340/120~300, 400/120~280					
Max. Output (N)	2,266	3,772	6,671	11,482	18,586	26,836
Max. Stroke (mm)	20	30	40	90	110	110
Action	Direct Action (DA) or Reverse Action (RA)					
Environment Temp.	Standard Type: -20~+70℃, Low Temp. Service: -50+40℃, High Temp. Service: 0~+100℃					
Options	Manual Handwheel, Limit Switch, Positioner, Airset, Solenoid Valve, etc.					

执行机构

D100R系列气动薄膜式执行机构

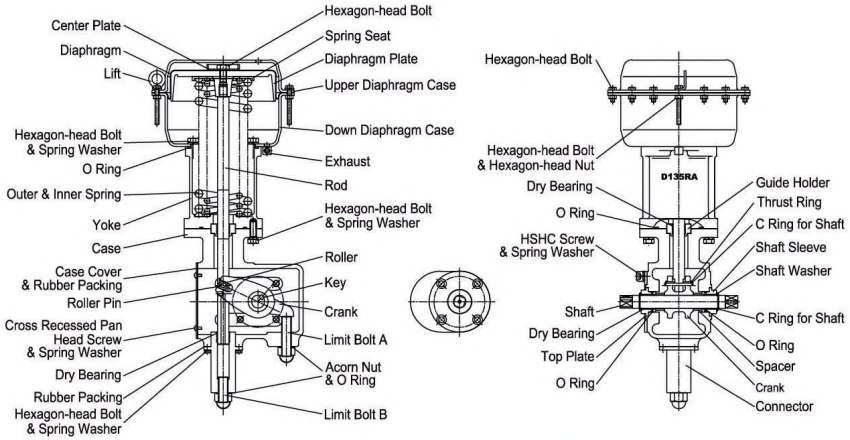

D100R without Manual Handwheel

D100R规格

型式	角行程				
	D122RA	D127RA	D135RA	D14LRA	D15LRA
执行机构尺寸	220	270	350	450	550
执行机构有效面积 (cm²)	188.82	314.33	555.88	956.83	1,548.82
气源压力及弹簧范围 (KPa)	400/120~280				
最大输出扭矩 @ 70° (Nm)	61.5	153.5	362.0	934.7	1,891.2
额定行程	50°、60°、70°、90°				
动作方式	正作用（DA）、反作用（RA）				
允许环境温度	标准型：-20~+70℃，低温型-50+40℃，高温型：0~+100℃				
选购设备	手轮机构、限位开关、定位器、过滤减压阀、电磁阀等				

ACTUATORS

D100R Pneumatic Diaphragm

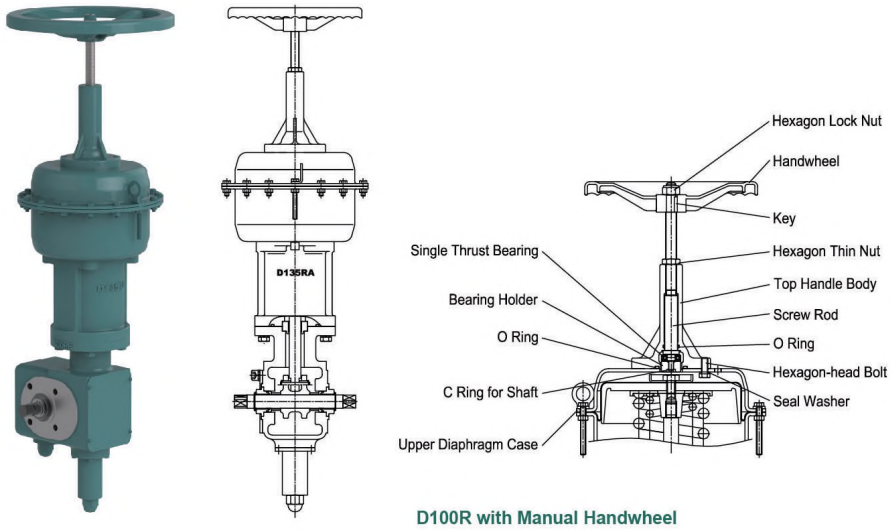

D100R with Manual Handwheel

D100R Specifications

Type	Rotary Shaft Motion Type				
	D122RA	D127RA	D135RA	D14LRA	D15LRA
Actuator Size	220	270	350	450	550
Nominal Diaphragm Area (cm²)	188.82	314.33	555.88	956.83	1,548.82
Air Supply /Spring Range (KPa)	400/120~280				
Max. Output @ 70° (Nm)	61.5	153.5	362.0	934.7	1,891.2
Rated Stroke	50°、60°、70°、90°				
Action	Direct Action (DA) or Reverse Action (RA)				
Environment Temp.	Standard Type: -20~+70℃, Low Temp. Service: -50+40℃, High Temp. Service: 0~+100℃				
Options	Manual Handwheel, Limit Switch, Positioner, Airset, Solenoid Valve, etc.				

执行机构

P100LA/P300LA 系列气动活塞式执行机构

该系列是大输出力、高性能的气动活塞式双动作执行机构，可与直行程控制阀搭配，包括各类球形阀和闸阀。P100LA适合于比例调节和开关控制，也可以用于其他线性动作的装置，P300LA是闸阀专用。

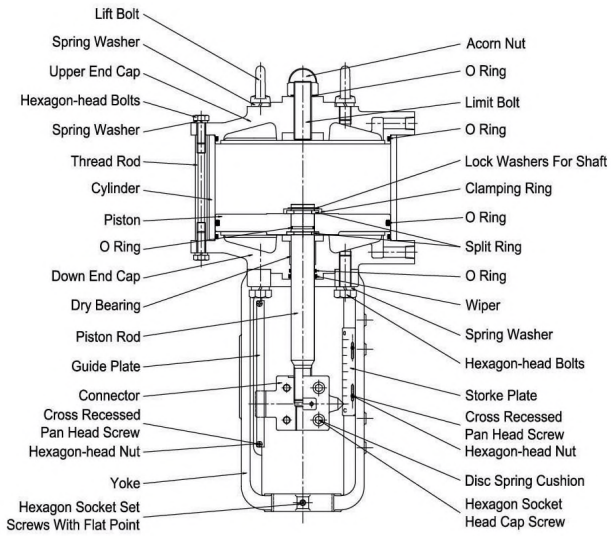

P100LA/P300LA without Manual Handwheel

P100LA/P300LA规格

型式	P120LA P320LA	P130LA P330LA	P337LA	P145LA P345LA	P160LA P360LA	P380LA	P310LA
执行机构尺寸	200	300	370	450	600	800	1000
最大输出力 @ 500 KPa (N)	14,550	33,460	50,920	75,660	130,460	237,650	373,450
最大行程 (mm)	220	320	420	520	620	620	620
气源压力 (KPa)	300~500						
动作方式	双动作（单作用可选）						
允许环境温度	标准型：-20~+60℃，低温型-50+60℃，高温型：0~+100℃						
选购设备	手轮机构、限位开关、定位器、增速器、过滤减压阀、电磁阀等						

ACTUATORS

P100LA/P300LA Pneumatic Piston Actuators

Pneumatic double-action actuator of piston type of this series enjoys large thrust and high performance which can be used with straight stroke control valve, including all kinds of globe valves and gate valves. P100LA is applicable for modulating and on-off control which can also be applied for other devices with linear action, P300LA is used for gate valve only.

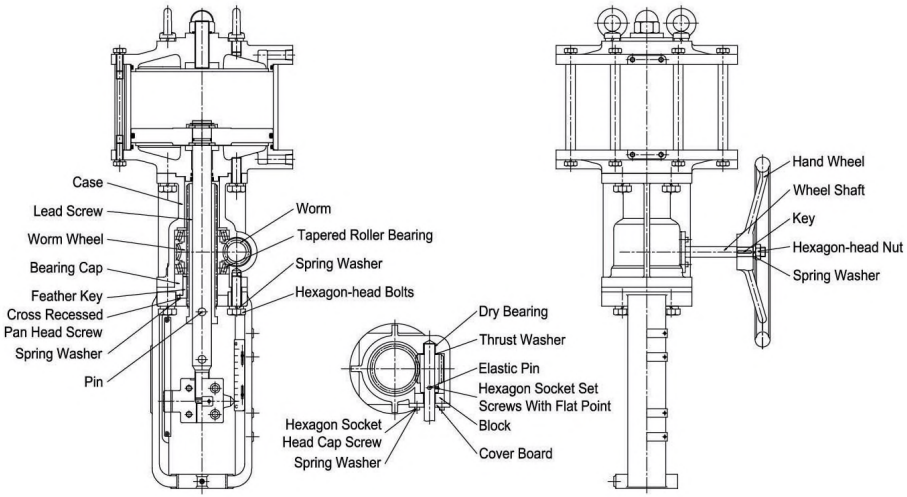

P100LA/P300LA with Manual Handwheel

P100LA Specifications

Type	P120LA P320LA	P130LA P330LA	P337LA	P145LA P345LA	P160LA P360LA	P380LA	P310LA
Actuator Size	200	300	370	450	600	800	1000
Max. Output @ 500KPa (N)	14,550	33,460	50,920	75,660	130,460	237,650	373,450
Max. Stroke (mm)	220	320	420	520	620	620	620
Air Supply (KPa)	300~500						
Action	Double Acting (Spring-return is option)						
Environment Temp.	Standard Type: -20~+70℃, Low Temp. Service: -50+40℃, High Temp. Service: 0~+100℃						
Options	Manual Handwheel, Limit Switch, Positioner, Booster Relay, Airset, Solenoid Valve, etc.						

执行机构

P200RA 系列气动活塞式执行机构

该系列是双气缸齿轮、齿条式气动执行机构，是一种体积小、输出扭矩稳定、动作可靠的执行机构，适用于比例调节和开关控制。

输出轴回转角度有50°、60°、70°、90°可选，可与回转类控制阀搭配，包括各类球阀、蝶阀和凸轮挠曲阀。P200RA适合于比例调节和开关控制，也可以用于其他回转动作的装置。

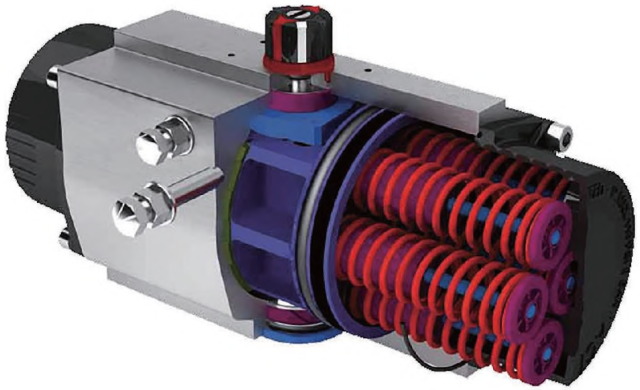

P200RA单作用执行机构

P200RA规格

P200RA	双动作型												
型式	P204RA	P206RA	P208RA	P209RA	P210RA	P212RA	P214RA	P216RA	P218RA	P221RA	P223RA	P230RA	P234RA
气缸内径尺寸 (mm)	Φ45	Φ60	Φ80	Φ90	Φ104	Φ125	Φ140	Φ160	Φ180	Φ210	Φ235	Φ300	Φ340
输出扭矩 @ 500 KPa (Nm)	16.2	33.9	64.1	98.4	146	242	361	598	865	1,178	1,810	2,884	4,013
供气压力	300~600 KPa												
P200RA	单动作型												
型式	P204RA	P206RA	P208RA	P209RA	P210RA	P212RA	P214RA	P216RA	P218RA	P221RA	P223RA	P230RA	P234RA
气缸内径尺寸 (mm)	Φ45	Φ60	Φ80	Φ90	Φ104	Φ125	Φ140	Φ160	Φ180	Φ210	Φ235	Φ300	Φ340
输出扭矩 @ 500 KPa (Nm)	7	13	26	39	63	101	152	232	343	461	655	1,184	1,516
供气压力	300、350、400、450、500、550、600 KPa												
作用方式	正作用（DA）、反作用（RA）												
允许环境温度	标准型：-30~+100℃，低温型：-40(-50)~+80℃，高温型：-15~+150℃												
选购设备	手轮机构、限位开关、定位器、增速器、过滤减压阀、电磁阀、锁止阀、调速器等												

ACTUATORS

P200RA Pneumatic Piston Actuators

This series is 2 piston Rack & Pinion pneumatic actuator, provides double-acting and spring return pneumatic torque cylinder actuators characterized by small size and high-performance. Combined with rotary shaft motion type control valves, including ball valves, butterfly valves and segmental ball valves, the actuators of this series are suited for modulating and on-off services. Uses with other rotary motion devices are also good.
Output shaft rotating angle of 50°, 60°, 70° and 90° are optional.

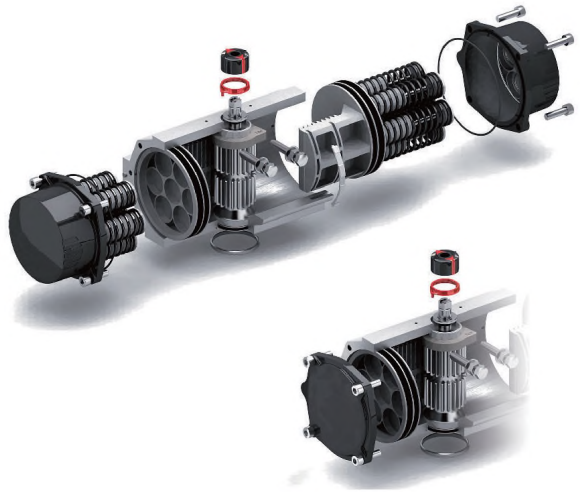

P200RA Spring Return Actuator

P200RA Specifications

P200RA	Double Acting Type												
Type Code	P204RA	P206RA	P208RA	P209RA	P210RA	P212RA	P214RA	P216RA	P218RA	P221RA	P223RA	P230RA	P234RA
Chamber Size (mm)	Φ45	Φ60	Φ80	Φ90	Φ104	Φ125	Φ140	Φ160	Φ180	Φ210	Φ235	Φ300	Φ340
Output Torque @ 500KPa (Nm)	16.2	33.9	64.1	98.4	146	242	361	598	865	1,178	1,810	2,884	4,013
Air Supply	300~600 KPa												
P200RA	Spring Return Type												
Type Code	P204RA	P206RA	P208RA	P209RA	P210RA	P212RA	P214RA	P216RA	P218RA	P221RA	P223RA	P230RA	P234RA
Chamber Size (mm)	Φ45	Φ60	Φ80	Φ90	Φ104	Φ125	Φ140	Φ160	Φ180	Φ210	Φ235	Φ300	Φ340
Output Torque @ 500KPa (Nm)	7	13	26	39	63	101	152	232	343	461	655	1,184	1,516
Air Supply	300、350、400、450、500、550、600 KPa												
Action	Direct Action or Reverse Action												
Environment Temperature	Standard Type: 30~+100℃, Low Temperature Service: -40(-50)~+80℃, High Temperature Service: -15~+150℃												
Options	Manual handwheel, Limit switch, Positioner, Air-set, Speed controller, Booster Relay, Lock-up valve, Solenoid valve etc.												

公 司 资 质

COMPANY QUALIFICATION

营业执照副本

A Copy Of the Business License

特种设备制造许可证

Manufacture License of Special Equipment

公 司 资 质 证 书

COMPANY QUALIFICATION CERTIFICATE

• ISO9001:2015 质量管理体系认证证书	• ISO9001:2015 Certificate of Quality Management System
• ISO14001:2004 环境管理体系认证证书	• ISO14001:2004 Certificate of Environment Management Syetem
• OHSAS18001:2007 职业健康安全管理体系认证证书	• OHSAS 18001:2007 Occupational Health & Safety Management System Certificate
• API 6D许可证书	• Certificate of Authority to Use API 6D
• IEC 61508-1 & 2:2010 SIL 2证书	• Certificate of IEC 61508-1 & 2:2010 SIL 2
• ISO 15848-1:2015 & TA-Luft VDI2440低逸散认证证书	• ISO 15848-1:2015 & TA-Luft VDI2440 Qualification Certificate of Low Fugitive Emission
• API 607, API 6FA防火试验证书	• API 607, API 6FA Certificate of Fire Safty

售 后 服 务 中 心

NO	名称	公司名称	联系人	地址	电话
1	华南服务中心	海南思哲机电设备有限公司	陈渊	海南省海口市海甸岛和平大道35号蓝岛康城1栋1A-5-3房	13707583900
2	西南服务中心	云南斯考尔科技有限公司	赵兴能	云南省昆明市盘龙区北京路延长线丽水雅苑1幢2902号	15887069508
3	山东服务中心	青岛普恩琪工程技术有限公司	李森	山东省青岛市黄岛区滨海大道路7777号	13902042309/18622761333
4	华北服务中心	北京斯特宝控制技术有限责任公司	袁军	北京市朝阳区北辰西路69号峻峰华庭C座1002室	13801063640
5	东北服务中心	哈尔滨超凡自动化控制科技有限公司	徐连超	哈尔滨市道里区迎宾小区102栋3单元4层3号	13704519020
6	西北服务中心	陕西乐辰控制技术有限公司	唐明	陕西省西安市高新区唐延路旺座时代1幢022201号	13152439639
7	文莱服务中心	SCORE ENGINEERING (B) SDN BHD	Gary Liau	Allied Engineering Solutions Sdn Bhd Unit 58, Hj Munchit & DHR Complex, Jln Perdana Menteri, Kg Jaya Setia, B.S.B BE2713 Negara Brunei Darussalam	+6732339639
8	台湾服务中心	博得生科技有限公司		台湾新北市中和区中正路868-1号12楼	+886-2-7731-2380

AFTER-SALES SERVICE CENTER

NO	Name	Company Name	Contacts	Address	Telephone
1	South China Service Center	Hainan Si Zhe Electromechanical Equipment Co. Ltd	Chen Yuan	Room 1a-5-3, Building 1, Landao Kangcheng, No. 35, Heping Avenue, Haidian Island, Haikou, Hainan	13707583900
2	Southwest Service Centre	Yunnan Score Technology Co., Ltd	Zhao Xing can	No. 2902, Building 1, Lishui Yayuan, Extension Line, Beijing Road, Panlong District, Kunming City, Yunnan Province	15887069508
3	Shandong Service Center	Qingdao Puenqi Engineering Technology Co. Ltd	Li Sen	7777 Binhai Da Lu, Huangdao District, Qingdao City, Shandong Province, China	13902042309/18622761333
4	North China Service Center	Beijing Stobo Control Technology Co. Ltd	Yuan Jun	Room 1002, Building C, Junfeng Huating, No.69 Beichen West Road, Chaoyang District, Beijing	13801063640
5	Northeast Service Center	Harbin Transcendental Automation Control Technology Co. Ltd	Xu Lian Chao	No.3, Floor 4, Unit 3, Building 102, Yingbin Community, Daoli District, Harbin	13704519020
6	Northwest Service Centre	Shanxi Lechen Control Technology Co. Ltd	Tang Ming	No.022201, Building 1, Wangzuo Times, Tangyan Road, High-tech Zone, Xi 'An City, Shaanxi Province	13152439639
7	Brunei Service Centre	Score Engineering (B) Sdn Bhd	Gary Liau	Allied Engineering Solutions Sdn Bhd Unit 58, Hj Munchit & Dhr Complex, Jln Perdana Menteri, Kg Jaya Setia, B.S.B Be2713 Negara Brunei Darussalam	+6732339639
8	Taiwan Service Center	L & F Technology Co., Ltd.		12f, No.868-1, Jhongjheng Rd., Jhonghe Dist., New Taipei City 235, Taiwan	+886-2-7731-2380