SCORE GC

套筒导向型调节阀 Cage Guided Globe Valves

应用 Application

SCORE 的 GC 系列套筒导向型球形控制阀如图 1 所示采用平衡型阀芯、套筒导向，可用于各类液体和气体的节流调节，适用于非常广泛的温度、压降范围和重载荷的工况。GC100 系列是普通套筒阀，GC200 是多孔式套筒，GC300 是迷宫式套筒，GC400 是多段式阀芯型套筒阀，适用于不同调节压差的场合。GC100 系列也可以用于开关控制的场合。

SCORE GC serial single-port globe valves shown in figures 1 have balanced valve plugs and cage guiding for all general applications and heavy duty over a wide range of process pressure drops and temperatures. These valves are used for throttling control of a wide variety of liquids and gases, GC100 is a normal cage trim, GC200 is multi-hole cage and GC300 is labyrinth cage, GC400 is multi-step plug type. GC100 could be used for on-off control.

特点 Features

- 第三代的 S 型流畅的铸造阀体型腔，从第二代的等截面设计经过 CFD（计算流体动力学）分析改良为更合理高效的等平均流量流道，从而获得更大的流通能力来节约期初投资。
- 阀体和上阀盖通过双头螺柱压紧成为整体，设计规范符合 ASME Ⅷ。
- 坚固的套筒导向和独特的平衡密封环（常温为 GF TFE 结构，高温为柔性石墨材质）为阀芯上下运动提供高度的稳定性，降低了震动和机械噪音。
- 标准的快速更换阀内件更便于现场维护，即使阀体在管线上，也可以很容易地从阀体中取下所有的阀内件。GC100 阀内件也可以方便地更换为 GC200 多孔式阀内件、GC300 迷宫式阀内件和 GC400 多段式阀芯阀内件，从而适用不同的工况，以保证阀内件出口流速或者动能在安全的范围内，防止空化、气蚀的发生和有效降低噪音。
- 阀体结构允许材质符合 NACE0175-2003，详情请与 SCORE 联系。
- 高性能的 Pillar 聚四氟乙烯纤维、碳纤维编织型填料或 Pillar/Garlock 柔性石墨复合填料加上动态补偿蝶簧（Live-loading），大大降低了阀门填料函逸散泄漏的可能，符合 ISO 15848-1 和 TA-LUFT VDI2440 低逸散规范。

图 1. SCORE GC100 带 D100L 执行机构
Figure 1. SCORE GC100 Valve with D100L Actuator

- S shape smooth profile cast globe body is third- generation design of equal average-flowrate with CFD (Computational Fluid Dynamics) after second generation of equal-section design. So GC100 provide more flow capacity and low initial investment.
- High integrity body/bonnet bolting system design to ASME Ⅷ.
- Clamped cage guiding and special balance seal ring supplied from “GF TFE” or Graphite provides high valve plug stability, which reduces vibration and mechanical noise.
- Maintenance is more easy because of standard quick-change trim, the valve body can stay in the pipeline during removal of trim parts and customers could change GC100 trim to be GC200 multi-hole cage trim, GC300 labyrinth cage trim and GC400 multi-step plug trim easily to fit with different fluid by reducing the trim outlet fluid velocity or energy of valve and then eliminate cavitation, low the noise level.
- Valve constructions allow material compatibility with NACE MR0175-2003, pls contact with SCORE for details.
- High performance Teflon & graphite fiber braided packing from Pillar, graphite packing from Pillar & Garlock with live-loading to fit with low fugitive emissions ISO 15848-1 & TA-LUFT VDI2440.

GC 阀门工程参数 Engineering Date of SCORE GC

公称通径	**End Connection Sizes**	1”~24” (DN25~DN600)	
公称压力	**Valve Body Ratings**	ASME/ANSI B16.5 Class 150, 300, 600, 900, 1500, 2500; HG/T20615 Class 150, 300, 600, 900, 1500, 2500; GB/T9124-2019 & HG/T20592-2009 PN16, 25, 40, 63, 100, 160, 250, 320, 400	
连接方式	**End Connection Styles**	法兰式（RF、RTJ、凹面）、焊接式（SW：2”及 2”以下，BW） Flanged (RF, RTJ, FM), Weld ends (SW: 2” and under, BW)	
设计标准	**Design Standards**	ASME B16.34-2009, ASME Section Ⅷ-1,2 (for body/bonnet bolting) GB/T4213-2008, IEC 60534, GB/T9124-2019, HG/T20592-2009	
法兰距	**Body Face to Face Dimensions**	IEC 60534/ANSI/ISA-75.08.01 (for ANSI Class 150, 300, 600 & PN16, 25, 40, 63,100) ANSI/ISA-75.08.06 (for ANSI Class 900, 1500 and 2500 & PN160, 250, 320, 400) ANSI/ISA-75.08.03 & ANSI/ISA-75.08.05 (for ANSI Class 150, 300, 600, 900, 1500, 2500 & PN16, 25, 40, 63,100, 160, 250, 320, 400)	
阀内件形式	**Trim Form**	流体压力平衡型阀芯	Pressure balanced plug type
流量特性	**Characteristics**	线性、等百分比	Linear, Equal percentage
可调比 R	**Rangeability**	GC100 的可调比为 50:1，GC200、GC300、GC400 的可调比请参见 Cv 值表。 50:1 for GC100, GC200, GC300 & GC400 pls refer to the Rated Cv sheet.	
阀座泄漏量	**Seat Leakage**	金属阀座标准为 ANSI B16.104 (FCI 70.2) Class Ⅳ， 可选用 Class Ⅴ， 软阀座为 Class Ⅵ。	For metal seat, ANSI B16.104 (FCI 70.2) Class Ⅳ as standard, Class Ⅴ is option, Class Ⅵ with soft seat insert
上阀盖形式	**Bonnet Styles**	标准型 Standard Type：	-17~+230℃
		散热片型 Fin-Extension Type：	-45~-17℃ & ≥+230℃
		加长Ⅰ型 Long Extension TypeⅠ：	-100~-45℃
		加长Ⅱ型 Long Extension TypeⅡ：	-196~-100℃
		波纹管密封型	Bellows Seal Type
		蒸汽夹套型	Steam Jacket Type
上阀盖填料	**Bonnet Packing**	聚四氟乙烯纤维编织型填料（EDP19=P4525+P4519、P4525+P4390W2）、 聚四氟乙烯纤维&碳纤维编织型填料（P6528+P4519）、 柔性石墨填料（EDP17=P6710+P6617、EVSP9000）。 Teflon Fiber Braided Packing (EDP19=P4525+P4519, P4525+P4390W2), Teflon & Carbon Fiber Braided Packing (P6528+P4519), Graphite Packing (EDP17=P6710+P6617, EVSP9000).	
垫圈	**Gasket**	缠绕式垫圈（316L+聚四氟乙烯、316L+柔性石墨）。 Spiral wound metal with Teflon or Grafoil Filler (316L+PTFE, 316L+Graphite).	
表面涂层色	**Paint**	艳蓝（聚氨酯）和其他环氧树脂处理均可，不锈钢阀体材质时不需油漆。 Gorgeous blue RAL5018 (polyurethanes group) and other expoxy finishes is available. NO painting is standard for stainless steel body.	

阀体材质的温度-压力使用范围

Working Pressure-Temperature Ratings for Body Material

温度	ANSI Class 150							ANSI Class 300							ANSI Class 600						
Temp.	LCB	WCB	C5	WC6	WC9	CF8	CF8M	LCB	WCB	C5	WC6	WC9	CF8	CF8M	LCB	WCB	C5	WC6	WC9	CF8	CF8M
℃		A105	F5a	F11	F22	F304	F316		A105	F5a	F11	F22	F304	F316		A105	F5a	F11	F22	F304	F316
-196~-45	—	—	—	—	—	1.90	1.90	—	—	—	—	—	4.96	4.96	—	—	—	—	—	9.93	9.93
-45~-29	1.84	—	—	—	—	1.90	1.90	4.80	—	—	—	—	4.96	4.96	9.60	—	—	—	—	9.93	9.93
-29~38	1.84	1.96	2.00	1.98	1.98	1.90	1.90	4.80	5.11	5.17	5.17	5.17	4.96	4.96	9.60	10.21	10.34	10.34	10.34	9.93	9.93
50	1.82	1.92	1.95	1.95	1.95	1.83	1.84	4.75	5.01	5.17	5.17	5.17	4.78	4.81	94.9	10.02	10.34	10.34	10.34	9.56	9.62
100	1.74	1.77	1.77	1.77	1.77	1.57	1.62	4.53	4.66	5.15	5.15	5.15	4.09	4.22	9.07	9.32	10.30	10.30	10.30	8.17	8.44
150	1.58	1.58	1.58	1.58	1.58	1.42	1.48	4.39	4.51	5.03	4.97	5.03	3.70	3.85	8.79	9.02	10.03	9.95	10.03	7.40	7.70
200	1.38	1.38	1.38	1.38	1.38	1.32	1.37	4.25	4.38	4.86	4.80	4.86	3.45	3.57	8.51	8.76	9.72	9.59	9.72	6.90	7.13
250	1.21	1.21	1.21	1.21	1.21	1.21	1.21	4.08	4.19	4.63	4.63	4.63	3.25	3.34	8.16	8.39	9.27	9.27	9.27	6.50	6.68
300	1.02	1.02	1.02	1.02	1.02	1.02	1.02	3.87	3.98	4.29	4.29	4.29	3.09	3.16	7.74	7.96	8.57	8.57	8.57	6.18	6.32
325	0.93	0.93	0.93	0.93	0.93	0.93	0.93	3.76	3.87	4.14	4.14	4.14	3.02	3.09	7.52	7.74	8.26	8.26	8.26	6.04	6.18
350	0.84	0.84	0.84	0.84	0.84	0.84	0.84	3.64	3.76	4.03	4.03	4.03	2.96	3.03	7.28	7.51	8.04	8.04	8.04	5.93	6.07
375		0.74	0.74	0.74	0.74	0.74	0.74		3.64	3.89	3.89	3.89	2.90	2.99		7.27	7.76	7.76	7.76	5.81	5.98
400		0.65	0.65	0.65	0.65	0.65	0.65		3.47	3.65	3.65	3.65	2.84	2.94		6.94	7.33	7.33	7.33	5.69	5.89
425		0.55	0.55	0.55	0.55	0.55	0.55		2.88	3.52	3.52	3.52	2.80	2.91		5.75	7.00	7.00	7.00	5.60	5.83
450			0.46	0.46	0.46	0.46	0.46			3.37	3.37	3.37	2.74	2.88			6.77	6.77	6.77	5.48	5.77
475			0.37	0.37	0.37	0.37	0.37			2.79	3.17	3.17	2.69	2.87			5.57	6.34	6.34	5.39	5.73
500			0.28	0.28	0.28	0.28	0.28			2.14	2.57	2.82	2.65	2.82			4.28	5.15	5.65	5.30	5.65
538			0.14	0.14	0.14	0.14	0.14			1.37	1.49	1.84	2.44	2.52			2.74	2.98	3.69	4.89	5.00
550			0.14	0.14	0.14					1.20	1.27	1.56					2.41	2.54	3.13		
575			0.14	0.14	0.14					0.89	0.88	1.05					1.78	1.76	2.11		
600			0.14							0.62							1.25				
625			0.14							0.40							0.80				
650			0.09							0.24							0.47				

温度	ANSI Class 900							ANSI Class 1500							ANSI Class 2500						
Temp.	LCB	WCB	C5	WC6	WC9	CF8	CF8M	LCB	WCB	C5	WC6	WC9	CF8	CF8M	LCB	WCB	C5	WC6	WC9	CF8	CF8M
℃		A105	F5a	F11	F22	F304	F316		A105	F5a	F11	F22	F304	F316		A105	F5a	F11	F22	F304	F316
-196~-45	—	—	—	—	—	14.89	14.89	—	—	—	—	—	24.82	24.82	—	—	—	—	—	41.37	41.37
-45~-29	14.41	—	—	—	—	14.89	14.89	24.01	—	—	—	—	24.82	24.82	40.01	—	—	—	—	41.37	41.37
-29~38	14.41	15.32	15.51	15.51	15.51	14.89	14.89	24.01	25.53	25.86	25.86	25.86	24.82	24.82	39.56	42.55	43.09	43.09	43.09	41.37	41.37
50	14.24	15.04	15.51	15.51	15.51	14.35	14.43	23.73	25.06	25.86	25.86	25.86	23.91	24.06	37.78	41.77	43.09	43.09	43.09	39.85	40.09
100	13.60	13.98	15.46	15.44	15.46	12.26	12.66	22.67	23.30	25.76	25.74	25.76	20.43	21.10	36.61	38.83	42.94	42.90	42.94	34.04	35.16
150	13.18	13.52	15.06	14.92	15.06	11.10	11.55	21.97	22.54	25.08	24.87	25.08	18.50	19.25	35.44	37.56	41.82	41.45	41.82	30.84	32.08
200	12.76	13.14	14.58	14.39	14.58	10.34	10.70	21.27	21.90	24.34	23.98	24.34	17.24	17.83	33.98	36.50	40.54	39.96	40.54	28.73	29.72
250	12.23	12.58	13.90	13.90	13.90	9.75	10.01	20.39	20.97	23.18	23.18	23.18	16.24	16.69	32.24	34.95	38.62	38.62	38.62	27.07	27.81
300	11.61	11.95	12.86	12.86	12.86	9.27	9.49	19.34	19.91	21.44	21.44	21.44	15.46	15.81	31.31	33.18	35.71	35.71	35.71	25.76	26.35
325	11.27	11.61	12.40	12.40	12.40	9.07	9.27	18.79	19.36	20.66	20.66	20.66	15.11	15.44	30.33	32.26	34.43	34.43	34.43	25.19	25.74
350	10.92	11.27	12.07	12.07	12.07	8.89	9.10	18.20	18.78	20.11	20.11	20.11	14.81	15.16	29.14	31.30	33.53	33.53	33.53	24.69	25.27
375		10.91	11.65	11.65	11.65	8.71	8.96		18.18	19.41	19.41	19.41	14.52	14.94		30.31	32.32	32.32	32.32	24.19	24.90
400		10.42	10.98	10.98	10.98	8.53	8.83		17.36	18.31	18.31	18.31	14.22	14.72		28.93	30.49	30.49	30.49	23.70	24.53
425		8.63	10.51	10.51	10.51	8.40	8.74		14.38	17.51	17.51	17.51	14.00	14.57		23.97	29.16	29.16	29.16	23.33	24.29
450			10.14	10.14	10.14	8.22	8.65			16.90	16.90	16.90	13.70	14.42			28.18	28.18	28.18	22.84	24.04
475			8.36	9.51	9.51	8.08	8.60			13.93	15.82	15.82	13.47	14.34			23.21	26.39	26.39	22.45	23.89
500			6.41	7.72	8.47	7.95	8.47			10.69	12.86	14.09	13.24	14.09			17.82	21.44	23.50	22.07	23.50
538			4.11	4.47	5.53	7.33	7.52			6.86	7.45	9.22	12.21	12.55			11.43	12.41	15.37	20.36	20.89
550			3.61	3.81	4.69					6.02	6.35	7.82					10.04	10.59	13.03		
575			2.67	2.64	3.16					4.44	4.40	5.26					7.40	7.34	8.77		
600			1.87							3.12							5.19				
625			1.20							2.00							3.33				
650			0.71							1.18							1.97				

备注 Note: 1）法兰连接端阀门使用温度极限 538℃。 Flanged end valve ratings terminate at 538℃.

2）不锈钢在温度超过 538℃，仅当碳含量高于 0.04%时才可使用。For stainless steel at temperatures above 538℃，use only when the carbon content is 0.04% or higher.

GC100、GC200、GC300 材料组合
Material Combinations for GC100, GC200, GC300

阀体材质 Body Material		A216-WCB, A217-WC6, A217-WC9, A217-C5, A352-LCB			
上阀盖 Bonnet		A216-WCB, A217-WC6, A217-WC9, A217-C5, A352-LCB			
		A105, A182-F11, A182-F22, A182-F5a, A350-LF2			
套筒 Cage GC100、200	材质 Material	S41000			UNS K21590 (A182-F22)
	处理 Treatment	HT			渗氮 Nitrided
套筒 Cage GC300	材质 Material	S41000			UNS N07718
	处理 Treatment	HT			HT
阀芯 Plug	材质 Material	S31600	S17400	S17400	UNS K11572 (A182-F11)
	处理 Treatment	HCR	PH	PH	SF
阀座 Seat Ring	材质 Material	S31600+RTFE	S41000	S41000	UNS K11572 (A182-F11)
	处理 Treatment	——	HT	HT	SF
平衡密封环 Balance Seal	材质 Material	RTFE	RTFE	柔性石墨 Graphite	柔性石墨 Graphite
	垫环 Back Ring	S17700	S17700		
阀座允许泄漏量 Seat Leakage		Class Ⅵ	Class Ⅳ，Ⅴ	Class Ⅳ，Ⅴ	Class Ⅳ，Ⅴ
使用温度 Fluid temperature ℃	WCB Body WC6 Body C5 Body	-29~+200	-29~+230	-29~+425	-29~+565
	LCB Body	-45~+200	-45~+230	——	——

阀体材质 Body Material		A351-CF8, A351-CF8M					
上阀盖 Bonnet		A351-CF8, A351-CF8M					
		A276-304, A182-F304, A276-316, A182-F316					
套筒 Cage		S31600					
阀芯 Plug	材质 Material	S31600	S31600	S31600	S31600	S31600	S31600
	处理 Treatment	HCR	HCR	SS+HCR	SF	SF	SF
阀座 Seat Ring	材质 Material	S31600+RTFE	S31600	S31600	S31600	S31600	S31600
	处理 Treatment	——	——	SS	SF	SS	SF
平衡密封环 Balance Seal	材质 Material	RTFE	RTFE*	RTFE*	RTFE*	柔性石墨 Graphite	柔性石墨 Graphite
	垫环 Back Ring	S17700	S17700	S17700	S17700		
阀座允许泄漏量 Seat Leakage		Class Ⅵ	Class Ⅳ，Ⅴ			Class Ⅳ，Ⅴ	
使用温度 Fluid temperature ℃		-75~+200	-196~+230			-196~565	

* 注：流体温度在-75℃以下的场合，平衡密封环材质为 Fluoroloy G，垫环材质为 Elgiloy。

* Note: When the fluid temperature is below -75℃, the materials for balance seal and the back ring will be Fluoroly G and Elgiloy, respectively.

GC400 材料组合
Material Combinations for GC400

阀体材质 Body Material		A216-WCB, A217-WC6, A217-WC9, A217-C5, A352-LCB				
上阀盖 Bonnet		A216-WCB, A217-WC6, A217-WC9, A217-C5, A352-LCB				
		A105, A182-F11, A182-F22, A182-F5a, A350-LF2				
套筒 Cage	材质 Material	S17400				UNS K21590 (A182-F22)
	处理 Treatment	PH				渗氮 Nitrided
阀芯 Plug	材质 Material	S41000	S44004 (A276-440C)	S41000	S44004 (A276-440C)	UNS K11572 (A182-F11)
	处理 Treatment	HT	HT	HT	HT	SF
阀座 Seat Ring	材质 Material	S41000	S44004 (A276-440C)	S41000	S44004 (A276-440C)	UNS K11572 (A182-F11)
	处理 Treatment	HT	HT	HT	HT	SF
平衡密封环 Balance Seal	材质 Material	RTFE	RTFE	柔性石墨 Graphite	柔性石墨 Graphite	柔性石墨 Graphite
	垫环 Back Ring	S17700	S17700			
阀座允许泄漏量 Seat Leakage		Class Ⅳ, Ⅴ	Class Ⅳ, Ⅴ	Class Ⅳ, Ⅴ	Class IV, V	Class Ⅳ, Ⅴ
使用温度 Fluid temperature ℃	WCB Body WC6 Body C5 Body	-29~+230	-29~+230	-29~+425	-29~+425	-29~+565
	LCB Body	-45~+230	-45~+230	——	——	——

阀体材质 Body Material		A351-CF8, A351-CF8M		
上阀盖 Bonnet		A351-CF8, A351-CF8M		
		A276-304, A182-F304, A276-316, A182-F316		
套筒 Cage		S31600, S20910		
		HCR		
阀芯 Plug	材质 Material	S31600	S31600	S31600
	处理 Treatment	SF	SF	SF
阀座 Seat Ring	材质 Material	S31600	S31600	S31600
	处理 Treatment	SF	SF	SF
平衡密封环 Balance Seal	材质 Material	RTFE	Fluoroloy G	柔性石墨 Graphite
	垫环 Back Ring	S17700	Elgiloy	
阀座允许泄漏量 Seat Leakage		Class Ⅳ, Ⅴ	Class Ⅳ, Ⅴ	Class Ⅳ, Ⅴ
使用温度 Fluid temperature ℃		-75~+230	-196~+230	-196~565

备注 Note：

- PH: 析出硬化热处理 Precipitation Hardening
- HT: 热处理 Heat Treatment
- RTFE: 强化聚四氟乙烯 Reinforced Teflon
- HCR: 镀硬铬 Hard Chrome Plated
- SS: 密封面堆焊司太莱合金 Stellite Seat
- SF: 表面全部堆焊司太莱合金 Stellite Full Surface
- 小尺寸零件采用棒料加工，大尺寸零件采用锻件或铸件加工。
  SCORE used bar for small parts and forging or casting for big size parts.
- 阀杆标准材质 UNS S31603，但高压阀阀杆需要镀硬铬 HCR, 低温时可选 UNS S20910，高温时（>425℃）可选 UNS N07718。
  Standard material of stem is UNS S31603, but should be hard chrome plated (HCR) for high pressure valves, UNS S20910 for cryogenic & UNS N07718 for high temperature (>425℃) service is optional.
- 1-1/2” (dn40)以下阀芯与阀杆是一体式的，阀杆材质及处理同阀芯。
  Plug & stem is integrated (spindle) for plug size less than 1-1/2” (dn40).

平衡密封环使用温度・压力范围
Balance Seal Ring Pressure-Temperature Ratings

强化聚四氟乙烯/UNS S17700
Re-inforced Teflon/UNS S17700

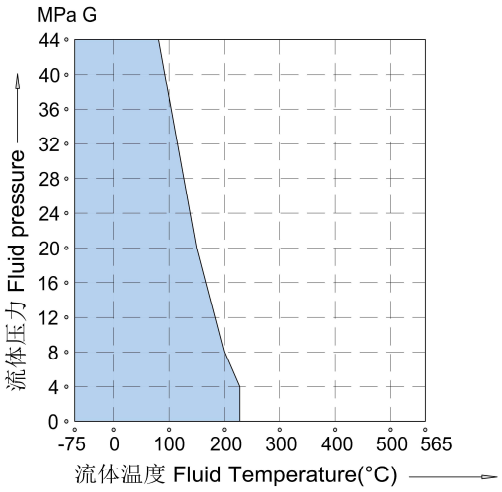

柔性石墨
Graphite

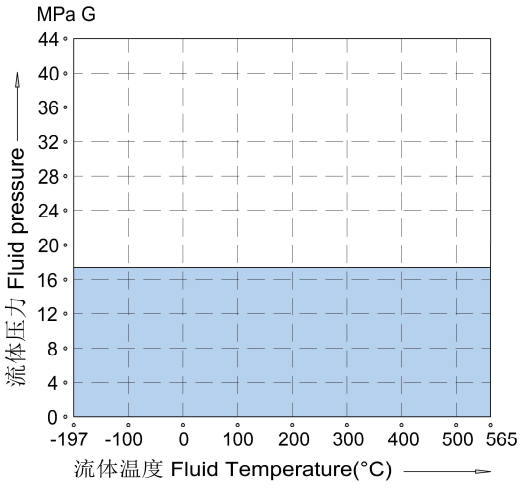

Fluoroloy G/Elgiloy

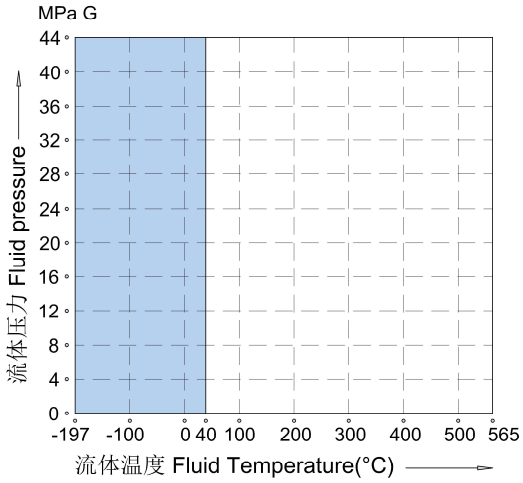

垫圈使用温度・压力范围
Gasket Pressure-Temperature Ratings

316L+柔性石墨
316L+Graphite

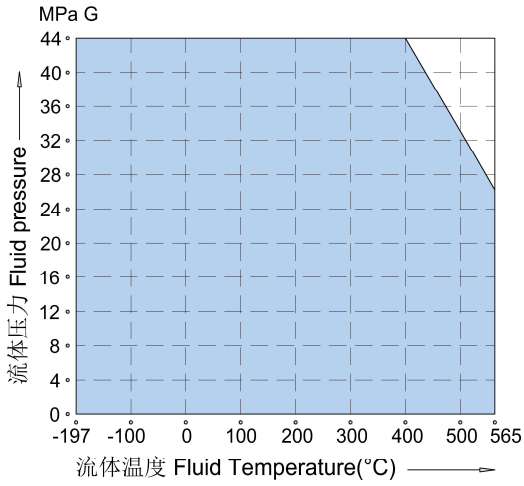

316L+纯聚四氟乙烯
316L+PTFE

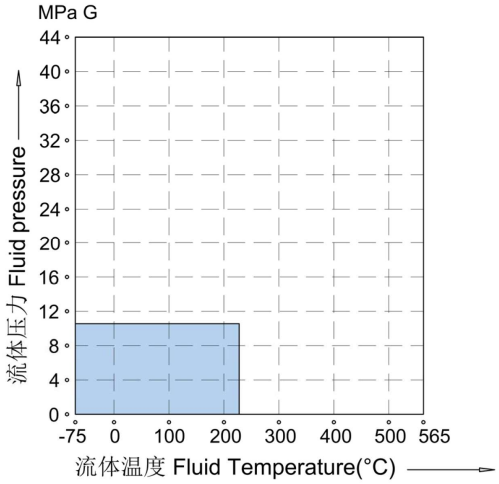

填料使用温度・压力范围
Gland Packing Pressure-Temperature Ratings

聚四氟乙烯纤维（EDP19、禁油用 P4525+P4390W2）
The Teflon Fiber (EDP19, P4525+P4390W2 for oil free)

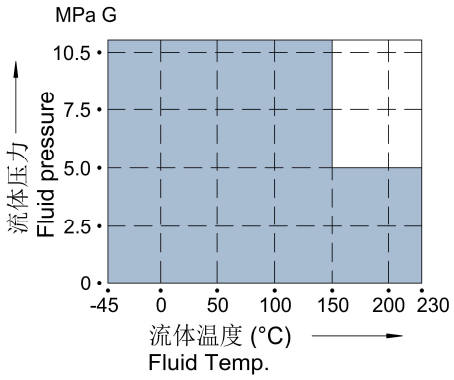

碳纤维/聚四氟乙烯纤维（P6528+P4519）
Carbon Fiber & Teflon Fiber (P6528+P4519)

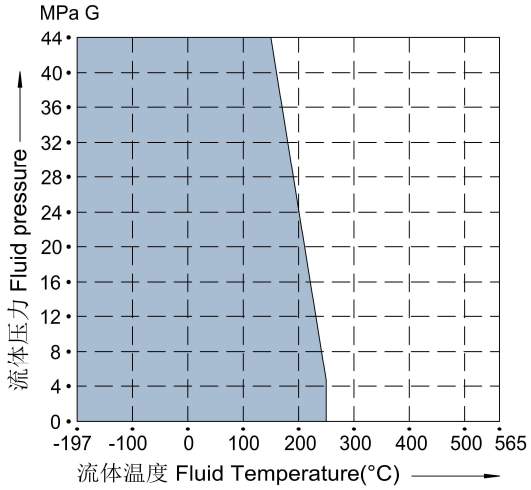

柔性石墨 Graphite (EDP17)

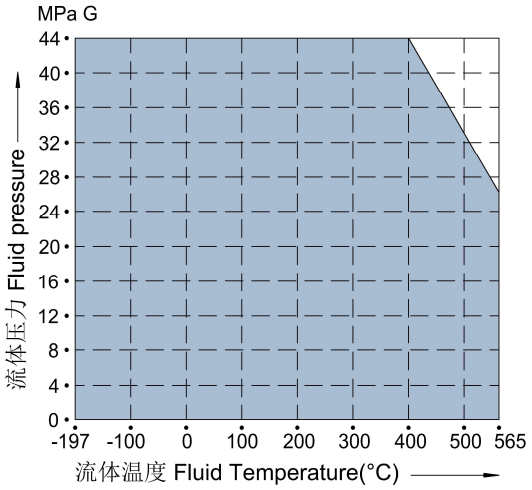

柔性石墨 Graphite (EVSP9000)

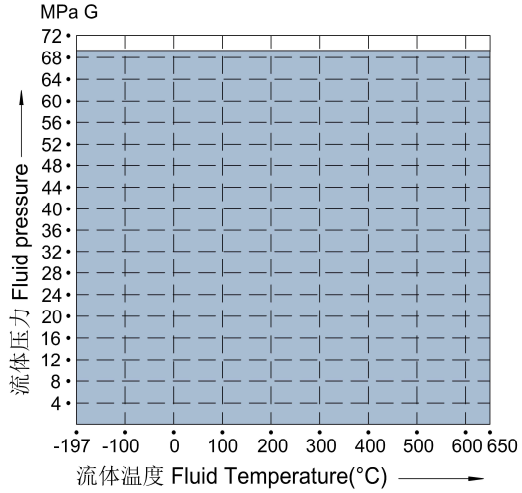

本体部结构 Body Assembly Construction

GC100

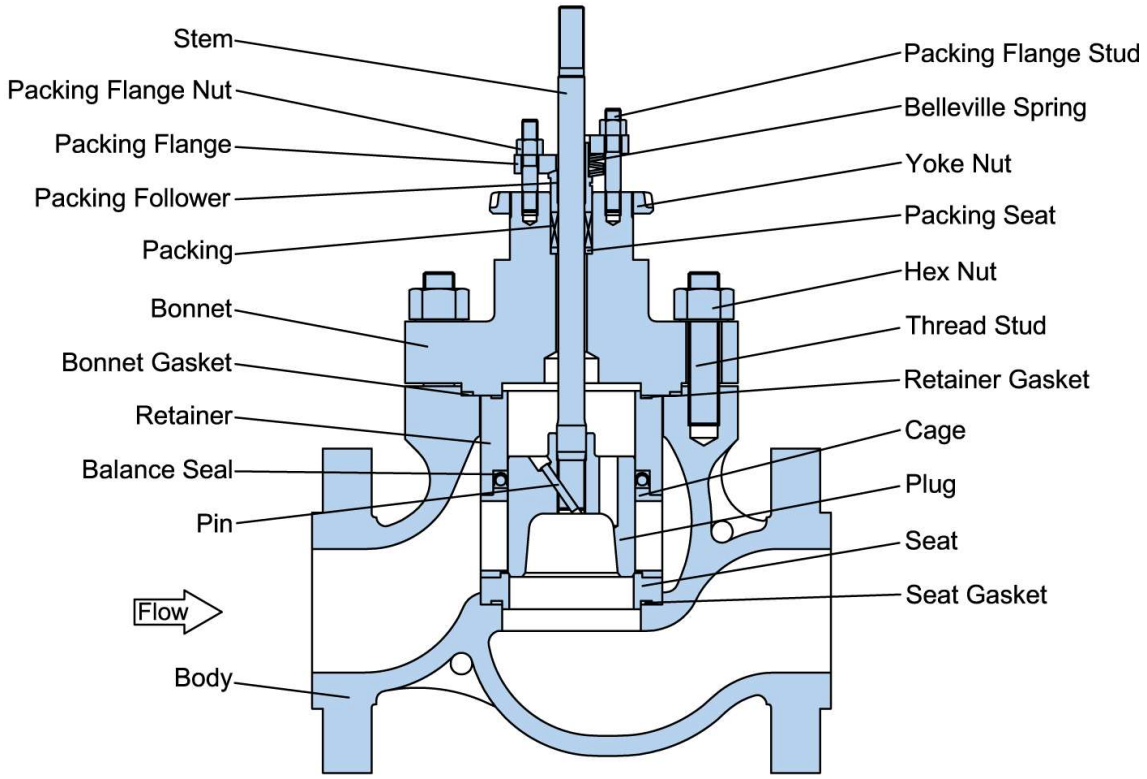

GC200 & GC300

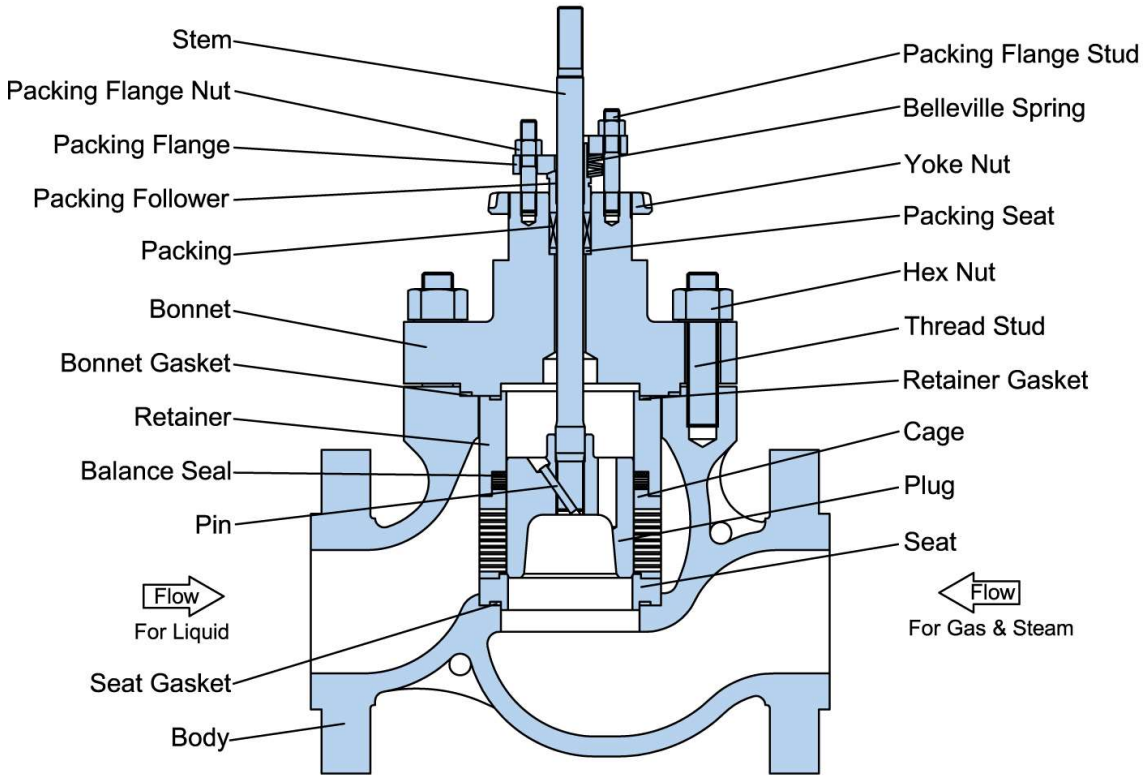

GC400

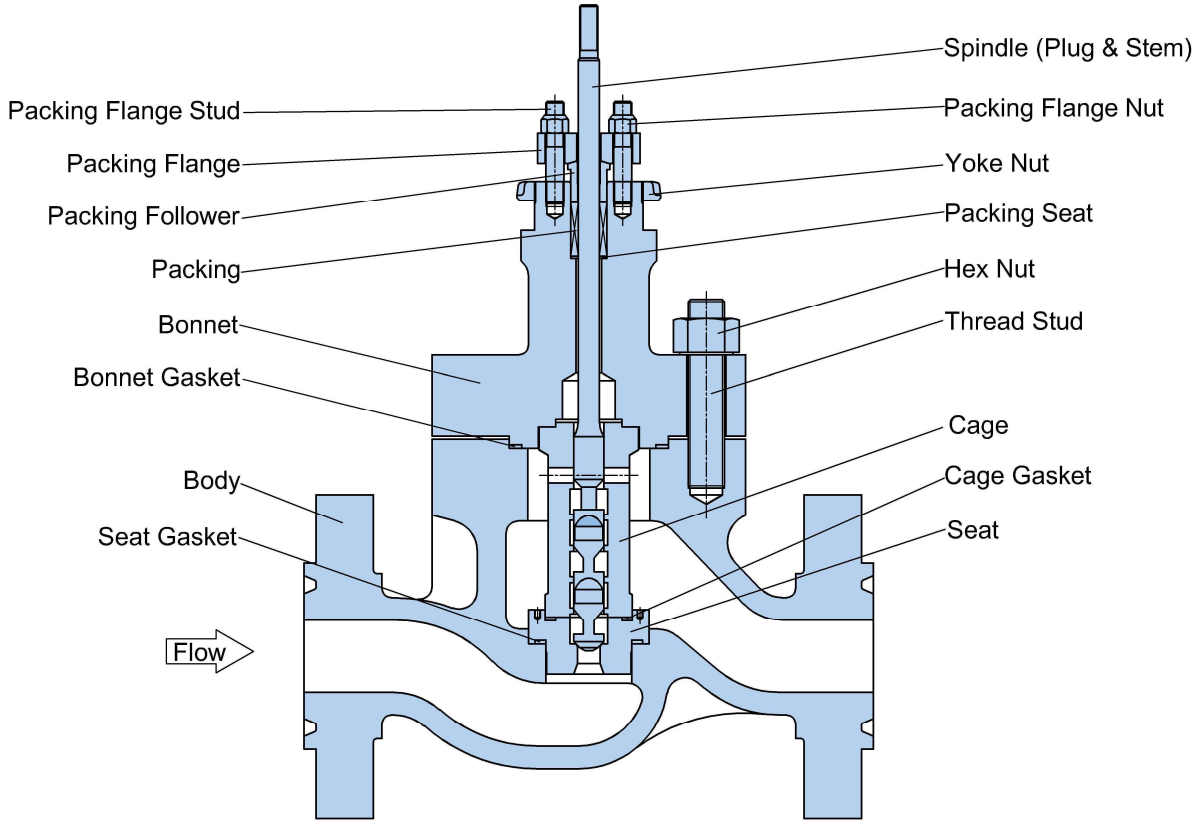

不平衡型阀芯，阀芯尺寸 1/2”~1-1/4”

Unbalance Plug, Plug Size 1/2”-1-/4”

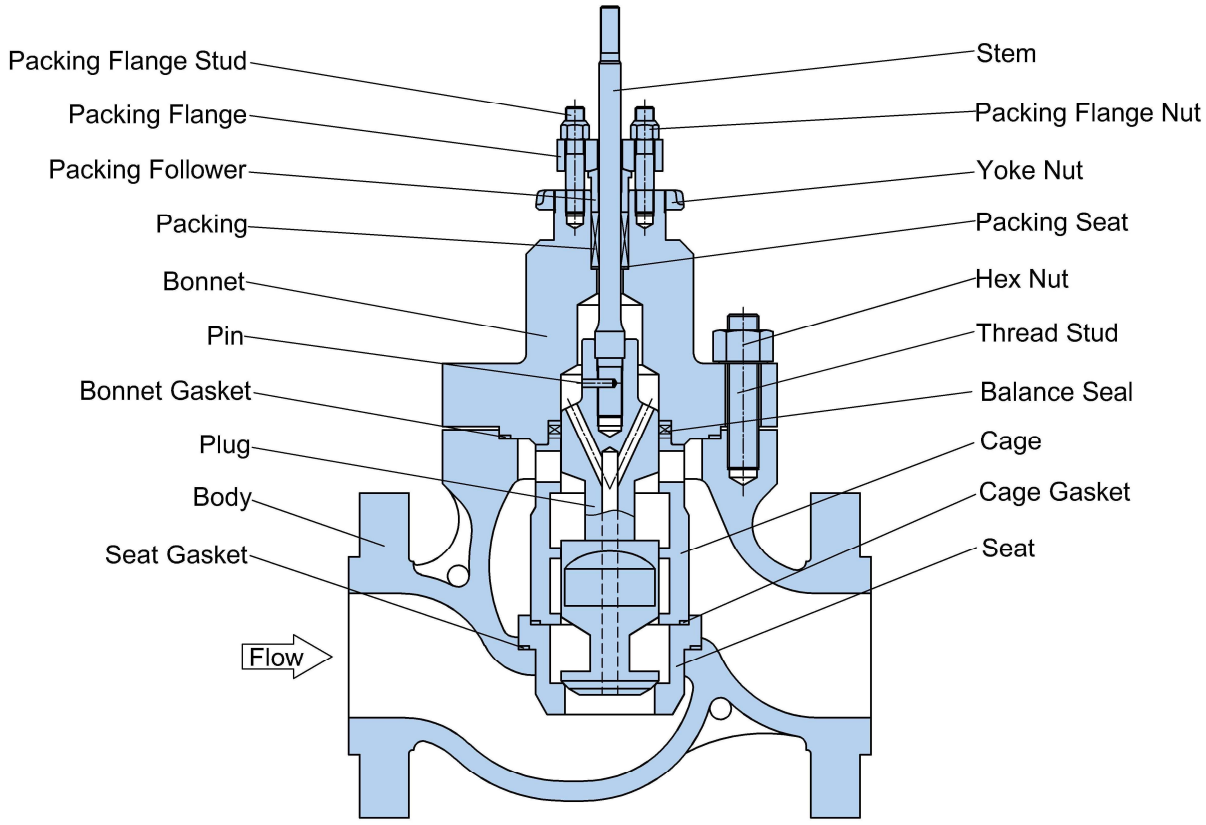

平衡型阀芯，阀芯尺寸≥1-1/4”

Balance Plug, Plug Size ≥1-/4”

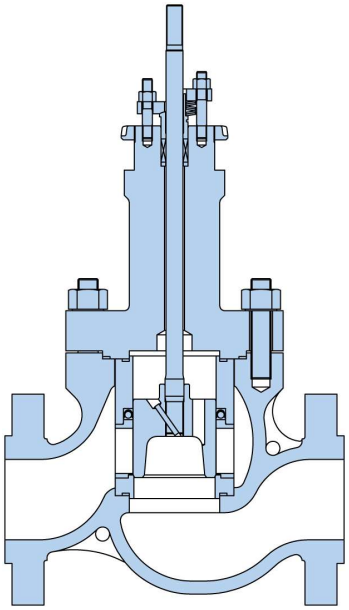

加长Ⅰ型阀盖
Long Extension Bonnet TypeⅠ
-45~-17℃ & ≥+230℃

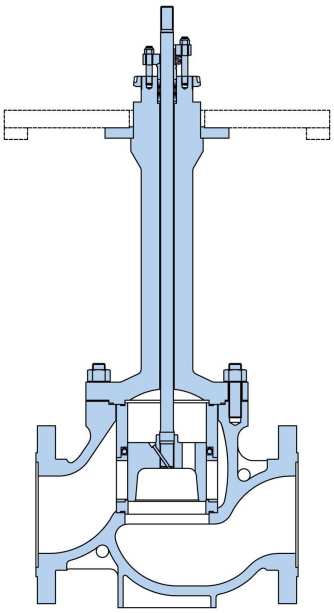

加长Ⅱ型阀盖（带或不带冷箱）
Long Extension Bonnet TypeⅡ
(with/without Cold Box)
-196~-45℃

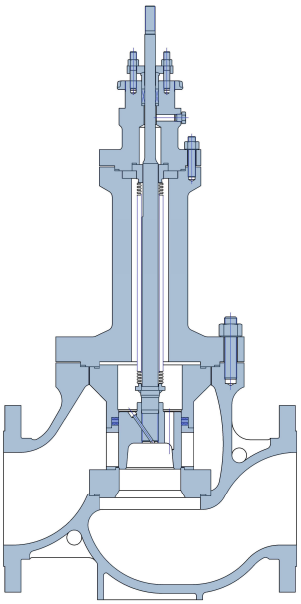

波纹管密封阀盖
Bellows Seal Bonnet

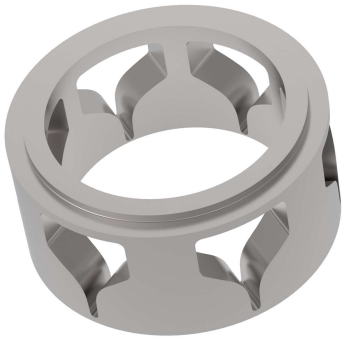

GC100 EQ%套筒
GC100 EQ% Cage

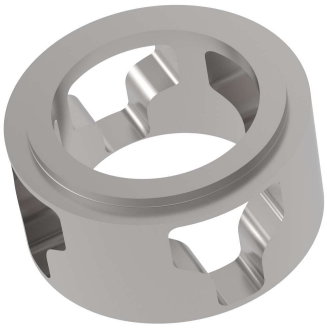

GC100 线性套筒
GC100 Linear Cage

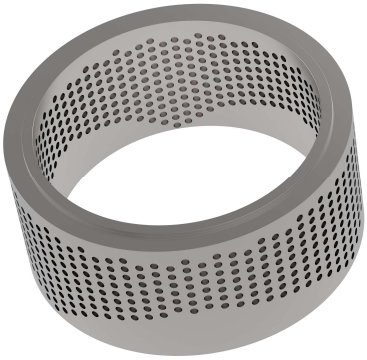

GC200 EQ%套筒 GC200 EQ% Cage

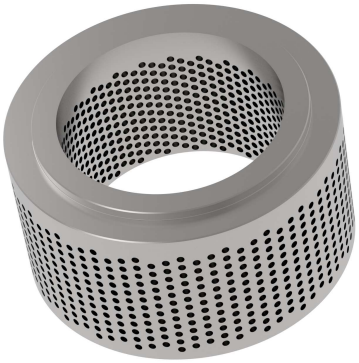

GC200 线性套筒 GC200 Linear Cage

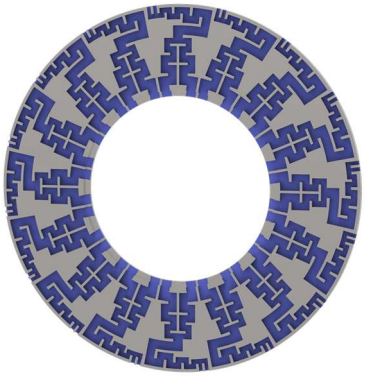

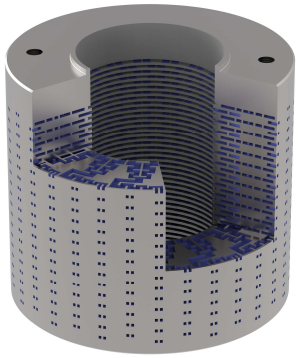

GC300 迷宫式套筒 GC300 Labyrinth Cage

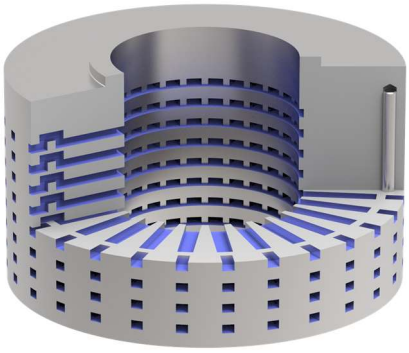

大流道迷宫式套筒用于非洁净流体
Big-Paths Labyrinth Cage Used for
Fluid Contains Slurry, Powder and etc.

GC400 多段式阀芯
GC400 Multi-Step Plug

GC100 ANSI 150#~600#、PN16~PN100 额定 Cv 值及行程
Rated Cv Values & Stroke for GC100 ANSI 150#~600#, PN16~PN100

公称通径 Valve Size		阀芯尺寸 Plug Size		行程 stroke	额定 Cv 值 Rated Cv	
Inch	mm	Inch	mm	mm	EQ%	Linear
1	25	1	25	20	12.5	16.0
1-1/2	40	1	25	20	13.5	17.5
		1-1/4	32	20	29	35
		1-1/2	40	25	41	50
2	50	1-1/4	32	20	30	37
		1-1/2	40	25	48	62
		2	50	30	68	83
3	80	2	50	30	76	105
		2-1/2	65	40	130	150
		3	80	40	140	155
4	100	2-1/2	65	40	140	165
		3	80	40	155	180
		4	100	50	220	240
6	150	4	100	50	270	310
		5	125	60	380	420
		6	150	70	430	470
8	200	6	150	70	535	615
		7	175	80	650	710
		8	200	90	730	785
10	250	8	200	90	860	1,000
		10	250	100	1,005	1,115
12	300	10	250	100	1,170	1,400
		12	300	110	1,370	1,505
14	350	12	300	110	1,560	1,685
		13	330	150	1,960	2,140
16	400	13	330	150	2,150	2,370
		14	350	150	2,200	2,410
18	450	14	350	150	2,585	2,875
		16	400	180	2,940	3,140
20	500	16	400	180	3,750	4,230
		19	475	230	4,240	4,690
24	600	20	500	230	5,270	5,870
		23	575	280	5,860	6,500

GC100 ANSI 150#~600#、PN16~PN100 相对行程下的 Cv 值
Cv Values Versus Stroke for GC100 ANSI 150#~600#, PN16~PN100

1、流量特性：等百分比 Flow Characteristic: EQ%

开度 Percent Stroke (10%)			5	10	20	30	40	50	60	70	80	90	100
公称通径 Valve Size Inch	阀芯尺寸 Plug Size Inch	行程 stroke mm	Cv 值 Cv Values										
1	1	20	0.11	0.15	0.55	1.02	1.54	2.15	2.92	4.17	6.34	9.69	12.5
1-1/2	1	20	0.11	0.15	0.55	1.02	1.54	2.15	2.96	4.23	6.41	9.96	13.5
	1-1/4	20	0.16	0.21	0.76	1.61	2.61	4.22	6.90	11.12	16.72	23.05	29
	1-1/2	25	0.31	0.41	1.36	2.43	3.88	6.02	9.31	14.55	22.75	32.81	41
2	1-1/4	20	0.16	0.21	0.76	1.61	2.62	4.24	6.97	11.25	16.92	23.48	30
	1-1/2	25	0.31	0.41	1.36	2.44	3.89	6.03	9.36	14.78	23.78	35.48	48
	2	30	0.55	0.73	2.38	4.22	6.54	9.90	14.85	22.96	35.54	52.91	68
3	2	30	0.56	0.74	2.41	4.22	6.57	9.91	14.97	23.05	36.42	55.87	76
	2-1/2	40	1.07	1.43	4.54	8.21	13.47	21.51	34.69	55.88	85.90	111.6	130
	3	40	1.07	1.43	4.57	9.17	14.79	22.59	35.49	61.42	95.21	121.8	140
4	2-1/2	40	1.07	1.43	4.54	8.24	13.59	21.73	35.18	57.45	88.24	118.1	140
	3	40	1.07	1.43	4.60	9.17	14.84	22.64	35.84	63.34	100.9	131.5	155
	4	50	2.01	2.68	8.61	15.0	24.1	38.0	59.5	95.6	145.1	192.5	220
6	4	50	2.03	2.71	8.77	15.2	24.1	38.0	60.7	106.6	171.3	230.4	270
	5	60	3.40	4.53	13.1	23.2	38.6	63.1	103.4	170.0	262.2	337.6	380
	6	70	5.17	6.92	20.2	35.5	54.6	84.0	133.3	220.6	335.6	404.2	430
8	6	70	5.17	6.92	20.4	35.5	54.6	84.0	133.3	220.6	355.8	468.7	535
	7	80	8.04	10.7	28.5	48.9	77.7	121.1	189.7	301.1	455.9	586.1	650
	8	90	8.06	10.8	32.2	59.0	98.0	156.6	247.2	385.6	568.9	681.6	730
10	8	90	8.06	10.8	32.4	59.0	98.0	156.6	247.9	387.0	604.2	778.6	860
	10	100	10.7	14.3	47.3	86.9	139.7	220.6	352.4	554.2	801.0	928.9	1,005
12	10	100	10.8	14.4	47.3	86.9	139.7	220.6	352.4	555.0	832.3	1,077	1,170
	12	110	14.8	19.8	65.1	124.0	198.0	305.7	491.6	776.5	1,091	1,295	1,370
14	12	110	14.8	19.8	65.2	124.0	198.0	307.9	491.8	777.1	1,153	1,419	1,560
	13	150	40.3	53.7	126.9	205.6	302.1	449.1	687.8	1,077	1,562	1,817	1,960
16	13	150	40.3	53.7	126.9	205.6	302.1	449.1	687.8	1,077	1,611	1,995	2,150
	14	150	44.7	59.6	131.9	215.7	313.3	493.8	773.1	1,208	1,775	2,085	2,200
18	14	150	44.7	59.6	131.9	215.7	342.3	541.9	859.7	1,354	2,022	2,455	2,585
	16	180	44.7	59.6	152.6	267.1	410.2	641.4	1,029	1,693	2,414	2,766	2,940
20	16	180	44.7	59.6	152.6	267.1	410.2	641.4	1,029	1,693	2,579	3,325	3,750
	19	230	55.7	74.3	199.0	368.7	592.5	931.1	1,557	2,511	3,477	3,972	4,240
24	20	230	55.7	74.3	199.0	368.7	597.5	970.2	1,712	2,866	4,126	4,931	5,270
	23	280	92.8	124.0	315.7	577.5	927.3	1,377	2,239	3,566	4,884	5,499	5,860

2、流量特性：线性 Flow Characteristic: Linear

开度 Percent Stroke (10%)			5	10	20	30	40	50	60	70	80	90	100
公称通径 Valve Size Inch	阀芯尺寸 Plug Size Inch	行程 stroke mm	Cv 值 Cv Values										
1	1	20	1.10	1.89	3.46	5.02	6.59	8.16	9.73	11.30	12.86	14.43	16
1-1/2	1	20	1.20	2.07	3.78	5.50	7.21	8.93	10.64	12.36	14.07	15.79	17.5
	1-1/4	20	2.41	4.13	7.56	10.99	14.42	17.85	21.28	24.71	28.14	31.57	35
	1-1/2	25	3.44	5.90	10.80	15.70	20.60	25.50	30.40	35.30	40.20	45.10	50
2	1-1/4	20	2.55	4.37	7.99	11.62	15.24	18.87	22.50	26.12	29.75	33.37	37
	1-1/2	25	4.28	7.32	13.39	19.47	25.54	31.62	37.70	43.77	49.85	55.92	62
	2	30	5.70	9.79	17.93	26.06	34.20	42.33	50.46	58.60	66.73	74.87	83
3	2	30	7.23	12.39	22.68	32.97	43.26	53.55	63.84	74.13	84.42	94.71	105
	2-1/2	40	10.35	17.70	32.40	47.10	61.80	76.50	91.20	105.9	120.6	135.3	150
	3	40	10.69	18.29	33.48	48.67	63.86	79.05	94.24	109.4	124.6	139.8	155
4	2-1/2	40	11.39	19.47	35.64	51.81	67.98	84.15	100.3	116.5	132.7	148.8	165
	3	40	12.42	21.24	38.88	56.52	74.16	91.80	109.4	127.1	144.7	162.4	180
	4	50	16.56	28.32	51.84	75.36	98.88	122.4	145.9	169.4	193.0	216.5	240
6	4	50	21.39	36.58	66.96	97.34	127.7	158.1	188.5	218.9	249.2	279.6	310
	5	60	28.98	49.56	90.72	131.9	173.0	214.2	255.4	296.5	337.7	378.8	420
	6	70	32.43	55.46	101.5	147.6	193.6	239.7	285.8	331.8	377.9	423.9	470
8	6	70	42.44	72.57	132.8	193.1	253.4	313.7	373.9	434.2	494.5	554.7	615
	7	80	48.99	83.78	153.4	222.9	292.5	362.1	431.7	501.3	570.8	640.4	710
	8	90	54.17	92.63	169.6	246.5	323.4	400.4	477.3	554.2	631.1	708.1	785
10	8	90	69.00	118.0	216.0	314.0	412.0	510.0	608.0	706.0	804.0	902.0	1,000
	10	100	76.94	131.6	240.8	350.1	459.4	568.7	677.9	787.2	896.5	1,006	1,115
12	10	100	96.60	165.2	302.4	439.6	576.8	714.0	851.2	988.4	1,126	1,263	1,400
	12	110	104.0	177.6	325.1	472.6	620.1	767.6	915.0	1,063	1,210	1,358	1,505
14	12	110	116.5	198.8	364.0	529.1	694.2	859.4	1,024	1,190	1,355	1,520	1,685
	13	150	148.0	252.5	462.2	672.0	881.7	1,091	1,301	1,511	1,721	1,930	2,140
16	13	150	164.0	279.7	511.9	744.2	976.4	1,209	1,441	1,673	1,905	2,138	2,370
	14	150	167.0	284.4	520.6	756.7	992.9	1,229	1,465	1,701	1,938	2,174	2,410
18	14	150	198.0	339.3	621.0	902.8	1,185	1,466	1,748	2,030	2,312	2,593	2,875
	16	180	217.0	370.5	678.2	986.0	1,294	1,601	1,909	2,217	2,525	2,832	3,140
20	16	180	291.0	499.1	913.7	1,328	1,743	2,157	2,572	2,986	3,401	3,815	4,230
	19	230	323.0	553.4	1,013	1,473	1,932	2,392	2,852	3,311	3,771	4,230	4,690
24	20	230	404.0	692.7	1,268	1,843	2,418	2,994	3,569	4,144	4,719	5,295	5,870
	23	280	447.0	767.0	1,404	2,041	2,678	3,315	3,952	4,589	5,226	5,863	6,500

GC100 ANSI 900#/1500#、PN160/PN250 额定 Cv 值及行程
Rated Cv Values & Stroke for GC100 ANSI 900#/1500#, PN160/PN250

公称通径 Valve Size		阀芯尺寸 Plug Size		行程 stroke	额定 Cv 值 Rated Cv	
Inch	mm	Inch	mm	mm	EQ%	Linear
1-1/2	40	1	25	20	14.0	15.5
		1-1/4	32	20	28.0	32.0
2	50	1	25	20	14.0	15.5
		1-1/4	32	20	30.0	34.0
		1-1/2	40	30	54.0	60.0
3	80	1-1/2	40	30	54.0	60.0
		2	50	40	90.0	100
		2-1/2	65	40	115	130

公称通径 Valve Size		阀芯尺寸 Plug Size		ANSI 900#/PN160			ANSI 1500#/PN250		
				行程 stroke	额定 Cv 值 Rated Cv		行程 stroke	额定 Cv 值 Rated Cv	
Inch	mm	Inch	mm	mm	EQ%	Linear	mm	EQ%	Linear
4	100	2	50	40	90	100	40	90	100
		2-1/2	65	40	125	140	40	125	140
		3	80	50	155	170	50	155	170
		4	100	60	230	255	—	—	—
6	150	3	80	50	155	170	50	155	170
		4	100	60	230	260	60	230	260
		5-1/2	140	70	420	465	70	415	460
		6	150	80	490	545	—	—	—
8	200	5	125	70	355	395	70	355	395
		6	150	80	510	565	80	510	565
		7	175	90	685	760	90	685	760
		8	200	100	825	920	—	—	—
10	250	6	150	80	510	565	80	510	565
		7	175	90	685	760	90	685	760
		8	200	100	885	985	100	885	985
12	300	7	175	90	685	760	90	685	760
		8	200	100	885	985	100	885	985
		10	250	110	1,310	1,455	110	1,310	1,455
		11	275	130	1,640	1,825	—	—	—
14	350	8	200	100	885	985	100	885	985
		10	250	110	1,310	1,455	110	1,310	1,455
		11	275	—	—	—	130	1,780	1,980
		12	300	130	1,875	2,085	—	—	—
16	400	12	300	130	1,875	2,085	130	1,875	2,085
		13	330	150	2,270	2,520	150	2,270	2,520
		14	350	180	2,760	3,065	—	—	—
18	450	13	330	150	2,270	2,520	150	2,270	2,520
		14	350	180	2,760	3,065	180	2,760	3,065
		16	400	200	3,515	3,905	—	—	—
20	500	14	350	180	2,760	3,065	180	2,760	3,065
		16	400	200	3,565	3,960	200	3,565	3,960
		18	450	270	4,000	4,450	—	—	—
24	600	18	450	270	4,830	5,370	230	4,555	5,060
		20	500	300	5,960	6,630	250	5,470	6,080
		22	550	300	6,600	7,340	—	—	—

GC100 ANSI 2500#/PN320、PN400 额定 Cv 值及行程
Rated Cv Values & Stroke for GC100 ANSI 2500#/PN320, PN400

公称通径 Valve Size		阀芯尺寸 Plug Size		行程 stroke	额定 Cv 值 Rated Cv	
Inch	mm	Inch	mm	mm	EQ%	Linear
1-1/2	40	1	25	20	14.0	15.5
2	50	1	25	20	14.0	15.5
		1-1/4	32	25	32.5	36.0
3	80	1-1/4	32	25	32.5	36.0
		1-1/2	40	30	54	60
		2	50	40	75	85
4	100	1-1/2	40	30	54	60
		2	50	40	80	90
		2-1/2	65	40	120	135
6	150	3	80	50	155	170
		4	100	60	230	260
		5	125	70	300	335
8	200	4	100	60	230	260
		5	125	70	355	395
		6	150	80	490	545
10	250	5	125	70	355	395
		6	150	80	510	565
		7	175	90	685	760
12	300	6	150	80	510	565
		7	175	90	685	760
		8	200	110	920	1,020
14	350	7	175	90	685	760
		8	200	110	920	1,020
		10	250	130	1,335	1,480
16	400	10	250	130	1,410	1,565
		11	275	150	1,725	1,920
18	450	10	250	130	1,410	1,565
		12	300	150	2,000	2,225
20	500	12	300	150	2,000	2,225
		13	330	180	2,445	2,720
24	600	14	350	180	2,760	3,065
		16	400	200	3,565	3,960

GC200 ANSI 150#~600#、PN16~PN100 额定 Cv 值及行程
Rated Cv Values & Stroke for GC200 ANSI 150#~600#, PN16~PN100

公称通径 Valve Size		阀芯尺寸 Plug Size		行程 Stroke	额定 Cv 值 Rated Cv		最小可控 CV 值 Min. Controllable Cv		小孔直径 Hole Szie
Inch	mm	Inch	mm	mm	EQ%	Linear	EQ%	Linear	mm
1	25	5/8	18	20	5.4	6.1	0.25	0.25	2.0
		1	25	20	10	12	0.39	0.84	2.0
1-1/2	40	1	25	20	10	12	0.39	0.84	2.0
		1-1/4	32	20	21	25	0.55	1.50	2.2
		1-1/2	40	25	28	33	0.98	1.60	2.4
2	50	1-1/4	32	20	21	25	0.55	1.50	2.2
		1-1/2	40	25	32	40	0.98	1.60	2.4
		2	50	30	43	50	1.40	2.70	2.4
3	80	2	50	30	50	60	1.40	2.70	2.4
		2-1/2	65	40	74	85	1.80	3.60	2.4
		3	80	40	95	115	2.30	4.80	2.8
4	100	2-1/2	65	40	74	85	1.80	3.60	2.4
		3	80	40	95	115	2.30	4.80	2.8
		4	100	50	150	175	2.70	5.80	2.8
6	150	4	100	50	150	175	2.70	5.80	2.8
		5	125	60	240	280	3.60	8.20	3.0
		6	150	70	342	400	4.70	11.3	3.6
8	200	6	150	70	342	400	4.70	11.3	3.6
		7	175	80	465	545	5.60	14.6	4.2
		8	200	90	595	700	7.10	18.9	4.8
10	250	8	200	90	595	700	7.10	18.9	4.8
		10	250	100	850	1,020	10.4	28.7	6.0
12	300	10	250	100	850	1,020	10.4	28.7	6.0
		12	300	110	1,100	1,370	12.9	37.8	7.0
14	350	12	300	110	1,100	1,370	12.9	37.8	7.0
		13	330	150	1,595	1,900	15.5	48.1	8.0
16	400	13	330	150	1,595	1,900	15.5	48.1	8.0
		14	350	150	1,830	2,180	17.4	58.6	9.0
18	450	14	350	150	1,830	2,180	17.4	58.6	9.0
		16	400	180	2,420	2,840	21.9	66.2	9.0
20	500	16	400	180	2,420	2,840	21.9	66.2	9.0
		19	475	230	3,680	4,250	28.7	102.0	12.0
24	600	20	500	230	3,930	4,620	31.4	110.0	12.0
		23	575	280	5,490	6,280	34.8	125.0	12.0

GC200 ANSI150#~600#、PN16~PN100 相对行程下的 Cv 值

Cv Values Versus Stroke for GC200 ANSI 150#~600#, PN16~PN100

1、流量特性：改良等百分比 Flow Characteristic: Modified EQ%

开度 Percent Stroke (10%)					5	10	20	30	40	50	60	70	80	90	100
公称通径 Valve Size		阀芯尺寸 Plug Size		行程 stroke	Cv 值 Cv Values										
Inch	mm	Inch	mm	mm											
1	25	5/8	18	20	—	—	0.30	0.60	1.04	1.33	2.15	3.09	4.02	4.86	**5.4**
		1	25	20	—	—	0.45	1.05	2.09	3.37	4.93	6.61	8.06	9.19	**10**
1-1/2	40	1	25	20	—	—	0.45	1.05	2.09	3.37	4.93	6.61	8.06	9.19	**10**
		1-1/4	32	20	—	—	0.81	1.96	3.91	6.59	9.79	13.2	16.1	18.6	**21**
		1-1/2	40	25	—	—	1.30	2.96	5.17	8.35	12.5	17.2	21.3	24.7	**28**
2	50	1-1/4	32	20	—	—	0.81	1.96	3.91	6.59	9.79	13.2	16.1	18.6	**21**
		1-1/2	40	25	—	—	1.30	2.97	5.20	8.45	12.8	18.1	23.1	27.6	**32**
		2	50	30	—	—	2.82	6.27	11.0	16.8	23.3	29.4	34.7	39.1	**43**
3	80	2	50	30	—	—	2.83	6.29	11.1	17.1	24.2	31.3	37.9	43.9	**50**
		2-1/2	65	40	—	—	5.00	11.1	19.5	29.7	39.6	48.9	57.5	65.3	**74**
		3	80	40	—	—	5.32	11.6	20.1	31.7	46.8	60.9	73.7	85.0	**95**
4	100	2-1/2	65	40	—	—	5.00	11.1	19.5	29.7	39.6	48.9	57.5	65.3	**74**
		3	80	40	—	—	5.32	11.6	20.1	31.7	46.8	60.9	73.7	85.0	**95**
		4	100	50	—	—	8.05	19.0	37.3	60.8	82.9	103.2	121.6	137.6	**150**
6	150	4	100	50	—	—	8.05	19.0	37.3	60.8	82.9	103.2	121.6	137.6	**150**
		5	125	60	—	—	11.7	28.8	56.3	92.9	128.8	161.5	191.1	216.7	**240**
		6	150	70	—	—	17.4	44.9	85.6	138.0	188.2	234.1	275.1	311.4	**342**
8	200	6	150	70	—	—	17.4	44.9	85.6	138.0	188.2	234.1	275.1	311.4	**342**
		7	175	80	—	—	23.1	59.2	112.8	182.0	249.5	311.3	367.0	416.2	**465**
		8	200	90	—	—	29.6	75.4	143.7	232.0	319.2	399.4	471.7	536.0	**595**
10	250	8	200	90	—	—	29.6	75.4	143.7	232.0	319.2	399.4	471.7	536.0	**595**
		10	250	100	—	—	38.7	99.0	188.2	304.1	429.8	547.4	656.0	753.9	**850**
12	300	10	250	100	—	—	38.7	99.0	188.2	304.1	429.8	547.4	656.0	753.9	**850**
		12	300	110	—	—	47.9	120.7	229.1	371.5	535.2	690.8	836.7	971.8	**1,100**
14	350	12	300	110	—	—	47.9	120.7	229.1	371.5	535.2	690.8	836.7	971.8	**1,100**
		13	330	150	—	20.8	76.1	182.5	353.8	584.7	831.7	1,056	1,256	1,435	**1,595**
16	400	13	330	150	—	20.8	76.1	182.5	353.8	584.7	831.7	1,056	1,256	1,435	**1,595**
		14	350	150	—	21.9	79.5	199.3	384.4	631.2	910.2	1,169	1,403	1,612	**1,830**
18	450	14	350	150	—	21.9	79.5	199.3	384.4	631.2	910.2	1,169	1,403	1,612	**1,830**
		16	400	180	—	30.6	121.2	304.9	581.1	939.2	1,287	1,609	1,904	2,163	**2,420**
20	500	16	400	180	—	30.6	121.2	304.9	581.1	939.2	1,287	1,609	1,904	2,163	**2,420**
		19	475	230	—	53.0	200.9	503.5	949.4	1,518	2,058	2,545	2,976	3,352	**3,680**
24	600	20	500	230	—	53.0	201.0	503.9	951.7	1,540	2,132	2,665	3,142	3,567	**3,930**
		23	575	280	—	76.1	309.6	784.7	1,473	2,310	3,092	3,796	4,419	4,961	**5,490**

2、流量特性：线性 Flow Characteristic: Linear

开度 Percent Stroke (10%)					5	10	20	30	40	50	60	70	80	90	100
公称通径 Valve Size		阀芯尺寸 Plug Size		行程 stroke	Cv 值 Cv Values										
Inch	mm	Inch	mm	mm											
1	25	5/8	18	20	—	—	0.75	1.75	2.87	4.02	4.80	5.33	5.69	5.94	**6.1**
		1	25	20	—	—	2.95	5.05	6.81	8.22	9.31	10.2	10.8	11.3	**12**
1-1/2	40	1	25	20	—	—	2.95	5.05	6.81	8.22	9.31	10.2	10.8	11.3	**12**
		1-1/4	32	20	—	—	4.83	8.56	12.0	15.1	17.7	20.0	21.9	23.5	**25**
		1-1/2	40	25	—	—	5.17	11.1	16.0	20.2	23.9	26.9	29.1	31.0	**33**
2	50	1-1/4	32	20	—	—	4.83	8.56	12.0	15.1	17.7	20.0	21.9	23.5	**25**
		1-1/2	40	25	—	—	5.19	11.3	16.7	21.7	26.5	30.7	34.1	37.4	**40**
		2	50	30	—	3.79	11.7	19.2	25.8	31.6	36.5	40.7	44.1	46.9	**50**
3	80	2	50	30	—	3.80	11.9	19.7	27.1	34.0	40.4	46.2	51.4	56.0	**60**
		2-1/2	65	40	—	6.51	17.3	27.7	37.7	47.1	55.8	63.8	71.1	77.7	**85**
		3	80	40	—	9.70	26.3	42.1	56.7	69.9	81.7	91.9	100.8	108.5	**115**
4	100	2-1/2	65	40	—	6.51	17.3	27.7	37.7	47.1	55.8	63.8	71.1	77.7	**85**
		3	80	40	—	9.70	26.3	42.1	56.7	69.9	81.7	91.9	100.8	108.5	**115**
		4	100	50	—	16.7	41.5	65.2	87.1	107.0	124.8	140.4	153.9	165.7	**175**
6	150	4	100	50	—	16.7	41.5	65.2	87.1	107.0	124.8	140.4	153.9	165.7	**175**
		5	125	60	—	28.8	68.6	106.3	141.3	172.8	200.8	225.3	246.6	264.9	**280**
		6	150	70	—	41.5	97.2	150.3	199.5	244.3	284.2	319.3	349.9	376.5	**400**
8	200	6	150	70	—	41.5	97.2	150.3	199.5	244.3	284.2	319.3	349.9	376.5	**400**
		7	175	80	—	56.4	130.8	201.9	268.0	328.4	382.7	430.7	472.9	509.6	**545**
		8	200	90	—	73.7	169.3	260.6	345.7	423.4	493.2	555.0	609.2	656.5	**700**
10	250	8	200	90	—	73.7	169.3	260.6	345.7	423.4	493.2	555.0	609.2	656.5	**700**
		10	250	100	—	88.2	222.0	351.2	473.5	587.5	691.8	786.3	871.2	946.6	**1,020**
12	300	10	250	100	—	88.2	222.0	351.2	473.5	587.5	691.8	786.3	871.2	946.6	**1,020**
		12	300	110	—	114.7	287.0	454.4	614.8	765.9	906.7	1,036	1,155	1,262	**1,370**
14	350	12	300	110	—	114.7	287.0	454.4	614.8	765.9	906.7	1,036	1,155	1,262	**1,370**
		13	330	150	—	198.7	464.1	716.6	950.8	1,164	1,353	1,520	1,666	1,792	**1,900**
16	400	13	330	150	—	198.7	464.1	716.6	950.8	1,164	1,353	1,520	1,666	1,792	**1,900**
		14	350	150	—	218.5	517.7	803.6	1,071	1,314	1,534	1,728	1,899	2,048	**2,180**
18	450	14	350	150	—	218.5	517.7	803.6	1,071	1,314	1,534	1,728	1,899	2,048	**2,180**
		16	400	180	—	298.1	680.8	1,047	1,389	1,703	1,985	2,237	2,459	2,653	**2,840**
20	500	16	400	180	—	298.1	680.8	1,047	1,389	1,703	1,985	2,237	2,459	2,653	**2,840**
		19	475	230	—	487.3	1,095	1,668	2,195	2,667	3,083	3,444	3,756	4,022	**4,250**
24	600	20	500	230	—	519.9	1,169	1,785	2,353	2,867	3,322	3,721	4,067	4,366	**4,620**
		23	575	280	—	747.0	1,633	2,469	3,236	3,925	4,531	5,059	5,513	5,902	**6,280**

GC300 ANSI 150#~600#、PN16~PN100 行程及 Cv 值
Cv Values & Stroke for GC300 ANSI 150#~600#, PN16~PN100

公称通径 Body Size		阀芯尺寸 Plug Size		行程 stroke	降压级数 No. of Stages								
						流开 Flow to Open (FTO)				流关 Flow to Close (FTC)			
Inch	mm	Inch	mm	mm	0	2	4	6	8	2	4	6	8
1	25	1/2	12.5	12	2.8	2.2	1.8	1.5	1.5	1.9	1.5	1.3	1.3
				20	3.1	2.8	2.5	2.2	2.2	2.6	2.2	1.9	1.9
		5/8	18	12	5.1	3.6	3.1	2.5	2.1	3.6	2.8	2.3	1.6
				20	6.0	4.9	4.5	3.9	3.3	5.0	4.1	3.5	2.6
		1	25	20	11.1	8.3	6.5	—	—	7.1	5.4	—	—
1-1/2	40	1	25	20	11.1	8.3	7.0	6.3	5.0	8.3	6.0	5.4	4.4
				25	11.8	9.4	8.2	7.4	6.0	9.4	7.1	6.5	5.4
		1-1/2	40	25	37.4	23.7	15.2	—	—	17.3	12.6	—	—
2	50	1-1/2	40	25	37.4	25.6	18.4	14.8	11.6	19.5	14.3	12.8	9.8
				30	41.5	29.6	21.7	17.6	13.8	22.8	17.0	15.2	11.7
		2	50	30	47.9	32.0	21.8	—	—	23.0	18.0	—	—
3	80	2	50	30	75.5	56.1	40.2	34.5	27.1	49.0	35.6	28.7	22.0
				40	84.4	69.2	53.2	46.7	37.6	62.5	48.0	39.6	30.9
		3	80	40	133.0	88.8	59.6	—	—	73.5	52.5	—	—
4	100	3	80	40	133.0	101.0	72.6	61.8	49.3	81.5	63.0	53.6	42.1
				50	142.0	114.0	85.2	73.5	59.3	94.4	74.7	64.3	51.0
		4	100	50	205.0	135.0	92.8	—	—	105.0	79.7	—	—
6	150	4	100	50	205.0	161.0	127.0	108.0	88.0	135.0	109.0	98.4	76.6
				70	223.0	190.0	158.0	137.0	115.0	165.0	139.0	127.0	101.0
		6	150	70	452.0	291.0	191.0	—	—	220.0	166.0	—	—
8	200	6	150	70	452.0	338.0	242.0	201.0	163.0	278.0	226.0	187.0	151.0
				90	494.0	398.0	300.0	254.0	209.0	339.0	282.0	237.0	194.0
		8	200	90	801.0	502.0	372.0	—	—	388.0	325.0	—	—
10	250	8	200	90	801.0	596.0	402.0	331.0	270.0	466.0	372.0	299.0	248.0
				100	830.0	635.0	437.0	361.0	295.0	503.0	405.0	327.0	271.0
		10	250	100	1,188.0	722.0	534.0	—	—	544.0	425.0	—	—
12	300	10	250	100	1,239.0	866.0	585.0	482.0	389.0	681.0	538.0	442.0	356.0
				110	1,277.0	915.0	627.0	518.0	419.0	727.0	578.0	476.0	384.0
		12	300	110	1,715.0	1,005.0	734.0	—	—	769.0	626.0	—	—
14	350	12	300	110	1,715.0	1,066.0	734.0	566.0	464.0	840.0	681.0	521.0	427.0
				150	1,933.0	1,349.0	972.0	763.0	631.0	1,098.0	907.0	705.0	582.0
		13	330	150	2,231.0	1,422.0	1,066.0	—	—	1,136.0	928.0	—	—
16	400	13	330	150	2,231.0	1,494.0	1,100.0	834.0	688.0	1,180.0	998.0	775.0	638.0
		14	350	150	2,537.0	1,558.0	1,194.0	—	—	1,211.0	1,017.0	—	—
18	450	14	350	150	2,537.0	1,745.0	1,194.0	949.0	783.0	1,348.0	1,125.0	875.0	732.0
		16	400	180	3,396.0	2,174.0	1,640.0	—	—	1,667.0	1,385.0	—	—

GC300 ANSI 150#~600#、PN16~PN100 标准迷宫式芯片的最小可控 Cv 值
Min. Controllable Cv Values for Standard Disc of GC300 ANSI 150#~600#, PN16~PN100 Labyrinth Cage

公称通径 Body Size		阀芯尺寸 Plug Size		间隙流量 Cv Gap Flow Cv	降压级数 No. of Stages								
						流开 Flow to Open (FTO)				流关 Flow to Close (FTC)			
Inch	mm	Inch	mm		0	2	4	6	8	2	4	6	8
1	25	1/2	12.5	0.04	1.6	0.9	0.6	0.5	0.5	0.7	0.5	0.4	0.4
		5/8	18	0.10	2.3	1.4	1.1	0.9	0.8	1.4	1.0	0.8	0.6
		1	25	0.24	3.3	1.9	1.5	—	—	1.6	1.2	—	—
1-1/2	40	1	25	0.24	3.3	1.9	1.6	1.4	1.1	1.9	1.3	1.2	1.0
		1-1/2	40	0.76	7.1	4.2	2.8	—	—	3.1	2.4	—	—
2	50	1-1/2	40	0.76	7.1	4.5	3.3	2.8	2.3	3.5	2.7	2.4	2.0
		2	50	1.05	9.1	5.2	3.6	—	—	3.8	3.1	—	—
3	80	2	50	1.05	14.6	8.7	6.0	5.2	4.2	7.4	5.3	4.4	3.6
		3	80	1.84	19.5	10.0	6.8	—	—	8.2	6.1	—	—
4	100	3	80	1.84	19.5	11.8	8.1	7.0	5.8	9.1	7.1	6.2	5.2
		4	100	2.25	24.0	12.2	8.5	—	—	9.5	7.5	—	—
6	150	4	100	2.25	24.0	15.4	11.4	9.7	8.1	12.2	9.8	8.9	7.3
		6	150	3.91	37.2	19.3	13.1	—	—	14.8	11.8	—	—
8	200	6	150	3.91	37.2	22.9	16.1	13.7	11.7	18.4	15.1	12.9	11.0
		8	200	5.83	50.0	25.7	19.6	—	—	20.3	17.6	—	—
10	250	8	200	5.83	50.0	31.1	20.9	17.9	15.5	23.9	19.6	16.6	14.6
		10	250	8.35	64.0	33.6	26.1	—	—	26.4	22.1	—	—
12	300	10	250	8.35	90.0	51.0	34.6	29.4	25.1	39.7	32.2	27.5	23.5
		12	300	10.01	109.0	53.0	39.8	—	—	41.4	35.0	—	—
14	350	12	300	10.01	109.0	56.0	41.0	32.5	28.3	44.7	37.4	30.6	26.7
		13	330	11.85	119.0	58.0	44.0	—	—	46.5	39.3	—	—
16	400	13	330	11.85	119.0	61.0	45.2	36.2	31.6	48.2	41.6	34.3	30.1
		14	350	12.76	128.0	63.0	48.5	—	—	49.1	42.5	—	—
18	450	14	350	12.76	128.0	71.0	48.5	40.4	35.2	54.0	46.1	38.0	33.7
		16	400	17.34	149.0	75.0	58.0	—	—	59.0	52.0	—	—

备注：如果计算最小 Cv 值小于标准芯片的最小可控 Cv 值，请与 SCORE 应用工程师确认，定制改良线性的迷宫式套筒使得最小计算 Cv 可控。

Note: If min. calculated Cv is less than min. controllable Cv of standard labyrinth cage (linear), please consult for SCORE AE, SCORE could customize labyrinth cage to be modified linear to reduce min. controllable Cv.

GC300 ANSI 900#/1500#、PN160/PN250 行程及 Cv 值
Cv Values & Stroke for GC300 ANSI 900#/1500#, PN160/PN250

公称通径 Body Size		阀芯尺寸 Plug Size		行程 stroke	流开 Flow to Open (FTO) 降压级数 No. of Stages												
Inch	mm	Inch	mm	mm	0	2	4	6	8	10	12	14	16	18	20	22	24
1-1/2	40	5/8	16	20	6.0	4.9	4.5	3.9	3.6	3.4	3.1	2.9	1.4	—	—	—	—
				30	7.1	6.2	5.8	5.2	4.9	4.7	4.3	4.0	2.1	—	—	—	—
				40	8.2	7.4	7.0	6.4	6.1	5.9	5.5	5.2	2.9	—	—	—	—
		1	25	20	11.1	8.2	7.0	6.2	5.2	4.5	1.9	1.8	—	—	—	—	—
				30	12.3	10.3	9.1	8.3	7.2	6.3	2.8	2.7	—	—	—	—	—
				40	13.0	11.6	10.7	10.0	8.9	8.0	3.8	3.7	—	—	—	—	—
		1-1/4	32	20	21.1	13.8	9.8	7.4	2.8	—	—	—	—	—	—	—	—
				30	25.2	18.5	13.9	10.7	4.2	—	—	—	—	—	—	—	—
				40	27.5	22.3	17.7	14.1	5.8	—	—	—	—	—	—	—	—
2	50	5/8	16	20	6.0	4.9	4.5	3.9	3.6	3.4	3.3	3.3	3.2	2.8	1.4	1.2	1.2
				30	7.1	6.2	5.8	5.2	4.9	4.7	4.6	4.5	4.5	4.0	2.1	1.8	1.8
				40	8.2	7.4	7.0	6.4	6.1	5.9	5.8	5.7	5.7	5.1	2.8	2.5	2.5
		1	25	20	11.1	8.2	7.0	6.2	5.6	5.1	5.0	4.1	3.7	2.0	—	—	—
				30	12.3	10.3	9.1	8.3	7.6	7.1	6.9	5.8	5.3	2.9	—	—	—
				40	13.0	11.6	10.7	10.0	9.3	8.8	8.6	7.5	6.9	4.0	—	—	—
		1-1/4	32	20	21.9	14.8	11.8	9.5	7.7	6.5	3.2	2.6	—	—	—	—	—
				30	26.6	19.9	16.4	13.6	11.2	9.6	4.8	3.9	—	—	—	—	—
				40	29.4	24.0	20.6	17.6	14.9	12.8	6.6	5.3	—	—	—	—	—
		1-1/2	40	20	31.8	18.5	12.9	10.3	3.7	—	—	—	—	—	—	—	—
				30	40.6	26.1	18.8	15.2	5.6	—	—	—	—	—	—	—	—
				40	46.6	33.3	24.9	20.5	7.7	—	—	—	—	—	—	—	—
3	80	1-1/4	32	30	26.6	19.9	17.1	14.9	13.5	12.1	11.8	10.6	9.2	7.7	7.1	4.5	3.7
				40	29.4	24.0	21.4	19.0	17.5	15.9	15.5	14.1	12.4	10.4	9.6	6.2	5.1
				50	30.7	26.4	24.0	21.8	20.3	18.6	18.2	16.7	14.8	12.6	11.7	7.6	6.3
		1-1/2	40	30	41.5	29.6	24.3	21.3	17.4	15.4	12.8	11.5	8.9	7.8	5.3	3.7	3.4
				40	48.0	37.2	31.5	28.0	23.3	20.7	17.4	15.7	12.3	10.8	7.4	5.2	4.8
				50	51.5	42.0	36.5	32.9	27.8	24.9	21.1	19.1	15.1	13.3	9.1	6.4	5.9
		2	50	30	57.8	38.2	27.6	22.9	17.9	15.7	13.5	9.7	6.8	4.6	—	—	—
				40	69.4	49.6	36.9	31.0	24.5	21.5	18.6	13.4	9.5	6.4	—	—	—
				50	76.1	57.5	44.0	37.5	29.8	26.3	22.9	16.5	11.7	7.9	—	—	—
		2-1/2	65	30	71.8	39.5	28.0	23.2	18.0	15.8	—	—	—	—	—	—	—
				40	87.2	52.5	38.1	31.7	24.8	21.7	—	—	—	—	—	—	—
				50	96.3	62.2	46.1	38.7	30.4	26.7	—	—	—	—	—	—	—
4	100	1-1/2	40	40	48.0	40.3	37.9	37.4	36.7	37.3	34.9	32.6	27.7	23.0	21.5	15.8	12.2
				50	51.5	44.9	42.7	42.2	41.5	42.1	39.8	37.5	32.6	27.5	25.8	19.2	15.0
				60	54.0	48.7	46.8	46.4	45.8	46.3	44.2	42.1	37.3	32.1	30.3	23.0	18.1
				70	55.4	51.0	49.4	49.0	48.5	48.9	47.1	45.2	40.6	35.5	33.6	25.9	20.7
		2	50	40	69.4	55.9	51.5	48.9	45.2	44.8	39.1	35.9	27.7	24.1	18.2	12.5	11.0
				50	76.1	63.8	59.4	56.8	53.0	52.6	46.4	42.9	33.6	29.4	22.4	15.5	13.5
				60	81.3	70.7	66.7	64.2	60.5	60.1	53.8	50.1	40.0	35.2	27.1	18.8	16.5
				70	84.4	75.3	71.6	69.3	65.8	65.3	59.2	55.5	45.0	39.9	30.9	21.7	19.0
		2-1/2	65	40	91.9	66.9	55.9	52.7	48.1	47.6	40.9	30.2	21.8	16.5	—	—	—
				50	102.7	78.3	66.5	62.9	57.9	57.3	49.6	37.0	26.8	20.4	—	—	—
				60	111.7	89.2	77.3	73.5	68.1	67.5	58.9	44.6	32.6	24.8	—	—	—
				70	117.2	96.8	85.2	81.4	75.8	75.2	66.3	50.7	37.4	28.6	—	—	—
		3	80	40	104.3	69.3	57.3	53.8	49.0	48.5	25.8	23.7	17.4	—	—	—	—
				50	117.6	82.2	68.9	64.9	59.4	58.8	31.8	29.3	21.5	—	—	—	—
				60	129.0	95.2	81.1	76.8	70.6	69.9	38.6	35.6	26.3	—	—	—	—
				70	136.3	104.6	90.3	85.9	79.4	78.7	44.3	40.9	30.3	—	—	—	—
6	150	2-1/2	65	60	127.8	112.5	102.2	94.0	85.2	79.0	67.3	61.7	56.3	44.8	41.5	34.9	27.7
				70	130.6	117.9	108.9	101.4	93.0	86.9	75.1	69.2	63.4	51.0	47.4	39.9	31.8
				80	133.0	123.1	115.6	109.0	101.4	95.6	84.1	78.1	72.1	58.7	54.8	46.5	37.2
				90	134.3	125.9	119.3	113.5	106.5	101.1	89.9	83.9	77.9	64.1	60.0	51.1	41.2
		3	80	60	149.8	129.9	114.0	108.1	92.7	83.1	72.2	63.6	57.7	45.5	42.1	35.2	26.4
				70	153.7	137.0	122.7	117.1	102.2	92.4	81.0	71.9	65.5	52.0	48.2	40.4	30.5
				80	157.2	143.9	131.6	126.6	112.7	103.1	91.6	82.0	75.2	60.3	56.1	47.2	35.8
				90	159.1	147.7	136.8	132.3	119.3	110.0	98.6	88.9	81.8	66.2	61.7	52.2	39.7
		4	100	60	215.6	177.3	143.6	123.5	101.9	89.5	76.3	66.3	55.5	46.5	38.5	25.4	25.1
				70	223.5	190.0	157.8	137.5	114.9	101.5	87.0	75.9	63.7	53.5	44.4	29.3	29.1
				80	230.7	202.9	173.5	153.7	130.5	116.3	100.4	88.1	74.4	62.6	52.2	34.5	34.3
				90	234.5	210.3	183.3	164.2	141.1	126.5	109.9	96.9	82.1	69.4	57.9	38.4	38.1
		5-1/2	140	60	367.3	220.5	163.8	135.6	108.5	93.8	—	—	—	—	—	—	—
				70	387.7	246.5	186.0	154.9	124.5	107.9	—	—	—	—	—	—	—
				80	407.6	276.9	213.4	179.4	145.2	126.3	—	—	—	—	—	—	—
				90	418.7	296.9	232.4	196.7	160.1	139.6	—	—	—	—	—	—	—

GC300 ANSI 900#/1500#、PN160/PN250 行程及 Cv 值
Cv Values & Stroke for GC300 ANSI 900#/1500#, PN160/PN250

公称通径 Body Size		阀芯尺寸 Plug Size		行程 Stroke	流开 Flow to Open (FTO) 降压级数 No. of Stages												
Inch	mm	Inch	mm	mm	0	2	4	6	8	10	12	14	16	18	20	22	24
8	200	4	100	60	215.6	177.3	156.5	141.5	127.2	112.3	97.4	85.3	81.5	60.7	55.6	47.1	38.2
				80	230.7	202.9	185.4	171.6	157.5	142.0	125.4	111.3	106.8	81.0	74.5	63.5	51.8
				100	237.5	216.4	201.9	189.8	177.0	162.0	145.4	130.6	125.7	97.2	89.7	77.0	63.0
				120	242.1	226.4	215.0	204.9	193.8	180.3	164.5	149.8	144.8	114.4	106.1	91.8	75.7
		5	125	60	316.9	248.3	199.6	168.1	138.1	119.6	102.1	88.3	84.1	61.7	56.4	47.6	38.5
				80	348.0	293.6	247.3	214.0	179.8	157.6	135.8	118.4	112.9	83.6	76.5	64.8	52.4
				100	362.9	319.4	278.0	245.7	210.5	186.6	162.4	142.5	136.2	101.8	93.3	79.2	64.2
				120	373.3	339.8	304.7	275.1	240.7	216.2	190.4	168.5	161.5	122.1	112.2	95.6	77.8
		6	150	60	427.8	284.4	214.3	176.7	142.7	122.6	103.9	89.5	85.1	62.1	56.7	41.9	38.6
				80	482.2	353.9	277.3	232.5	190.3	164.6	140.2	121.2	115.4	84.6	77.3	57.2	52.7
				100	509.8	399.0	322.8	275.1	228.0	198.5	170.0	147.6	140.6	103.6	94.7	70.2	64.7
				120	530.0	438.6	366.9	318.3	268.1	235.3	203.0	177.1	169.0	125.3	114.6	85.2	78.6
		7	175	60	538.7	301.6	221.4	180.6	144.8	123.9	107.8	80.8	65.9	48.7	—	—	—
				80	622.4	388.9	293.2	241.7	195.3	167.7	146.3	110.1	89.9	66.5	—	—	—
				100	667.4	451.5	348.8	290.6	236.7	204.1	178.5	134.8	110.2	81.7	—	—	—
				120	701.6	511.5	406.4	343.1	282.4	244.9	215.0	163.2	133.7	99.3	—	—	—
10	250	5	125	80	348.0	293.6	259.1	229.3	194.7	171.3	150.1	133.0	125.7	93.3	84.2	72.6	58.4
				100	362.9	319.4	288.9	260.8	226.2	201.4	178.3	159.2	150.9	113.2	102.5	88.6	71.4
				120	373.3	339.8	314.3	289.2	256.3	231.5	207.4	186.9	177.8	135.3	122.9	106.7	86.4
				140	379.1	351.9	330.1	307.9	277.3	253.3	229.3	208.2	198.7	153.3	139.7	121.7	98.9
		6	150	80	482.2	375.9	299.5	252.5	208.4	180.3	156.0	137.1	129.2	94.7	85.2	73.3	58.7
				100	509.8	419.6	345.7	296.7	248.4	216.6	188.6	166.4	157.0	115.7	104.3	89.8	72.1
				120	530.0	456.8	389.2	340.7	290.1	255.5	224.2	198.8	188.0	139.7	126.2	108.8	87.5
				140	541.4	480.1	419.0	372.4	321.7	285.8	252.5	225.1	213.3	159.7	144.4	124.8	100.6
		7	175	80	622.4	418.9	319.9	264.4	214.9	184.5	158.7	138.9	130.7	95.3	85.7	65.4	54.8
				100	667.4	482.0	378.2	316.5	259.6	224.0	193.4	169.6	159.7	116.8	105.1	80.4	67.3
				120	701.6	541.0	437.4	371.6	308.5	267.8	232.3	204.5	192.8	141.6	127.6	97.7	81.9
				140	721.4	581.0	481.1	414.0	347.4	303.3	264.4	233.4	220.3	162.5	146.6	112.5	94.4
		8	200	80	771.8	445.6	331.4	270.8	223.4	186.6	160.1	123.1	102.5	74.9	—	—	—
				100	838.1	524.1	397.6	327.6	271.7	227.8	195.8	151.0	125.9	92.1	—	—	—
				120	890.3	602.5	468.1	389.9	325.8	274.4	236.6	183.0	152.9	112.0	—	—	—
				140	921.1	659.4	522.8	439.7	369.9	313.0	270.7	210.1	175.8	129.0	—	—	—
12	300	6	150	120	482.2	—	—	—	—	—	—	—	—	—	—	—	—
				150	509.8	—	—	—	—	—	—	—	—	—	—	—	—
				180	530.0	—	—	—	—	—	—	—	—	—	—	—	—
				210	541.4	—	—	—	—	—	—	—	—	—	—	—	—
		7	175	120	701.6	—	—	—	—	—	—	—	—	—	—	—	—
				150	731.3	—	—	—	—	—	—	—	—	—	—	—	—
				180	747.4	—	—	—	—	—	—	—	—	—	—	—	—
				210	759.0	—	—	—	—	—	—	—	—	—	—	—	—
		8	200	120	890.3	—	—	—	—	—	—	—	—	—	—	—	—
				150	936.8	—	—	—	—	—	—	—	—	—	—	—	—
				180	962.7	—	—	—	—	—	—	—	—	—	—	—	—
				210	981.6	—	—	—	—	—	—	—	—	—	—	—	—
		10	250	120	1,301	—	—	—	—	—	—	—	—	—	—	—	—
				150	1,396	—	—	—	—	—	—	—	—	—	—	—	—
				180	1,452	—	—	—	—	—	—	—	—	—	—	—	—
				210	1,494	—	—	—	—	—	—	—	—	—	—	—	—

GC300 ANSI 900#/1500#、PN160/PN250 行程及 Cv 值
Cv Values & Stroke for GC300 ANSI 900#/1500#, PN160/PN250

公称通径 Body Size		阀芯尺寸 Plug Size		行程 Stroke	流关 Flow to Close (FTC) 降压级数 No. of Stages												
Inch	mm	Inch	mm	mm	0	2	4	6	8	10	12	14	16	18	20	22	24
1-1/2	40	5/8	16	20	6.0	4.9	4.1	3.5	3.0	2.6	2.2	1.5	1.3	—	—	—	—
				30	7.1	6.2	5.4	4.8	4.1	3.6	3.1	2.1	1.9	—	—	—	—
				40	8.2	7.4	6.7	6.0	5.3	4.8	4.2	2.9	2.5	—	—	—	—
		1	25	20	11.1	8.2	6.5	5.4	4.4	3.4	2.6	1.8	—	—	—	—	—
				30	12.3	10.3	8.6	7.4	6.2	4.9	3.8	2.7	—	—	—	—	—
				40	13.0	11.6	10.3	9.1	7.9	6.5	5.2	3.7	—	—	—	—	—
		1-1/4	32	20	21.1	11.5	7.9	6.8	2.8	—	—	—	—	—	—	—	—
				30	25.2	15.9	11.3	9.9	4.2	—	—	—	—	—	—	—	—
				40	27.5	19.8	14.8	13.2	5.8	—	—	—	—	—	—	—	—
2	50	5/8	16	20	6.0	4.9	4.1	3.5	3.0	2.6	2.2	1.8	1.3	1.3	1.2	1.1	0.9
				30	7.1	6.2	5.4	4.8	4.1	3.6	3.1	2.6	1.9	1.9	1.8	1.6	1.3
				40	8.2	7.4	6.7	6.0	5.3	4.8	4.2	3.5	2.5	2.5	2.5	2.2	1.8
		1	25	20	11.1	8.2	6.5	5.4	5.2	3.8	3.3	2.6	2.0	1.8	—	—	—
				30	12.3	10.3	8.6	7.4	7.2	5.4	4.8	3.7	2.9	2.7	—	—	—
				40	13.0	11.6	10.3	9.1	8.9	7.0	6.3	5.0	4.0	3.6	—	—	—
		1-1/4	32	20	21.9	13.2	9.9	8.5	6.4	5.0	4.0	2.8	—	—	—	—	—
				30	26.6	18.2	14.1	12.2	9.4	7.5	5.9	4.1	—	—	—	—	—
				40	29.4	22.4	18.1	16.0	12.6	10.1	8.1	5.7	—	—	—	—	—
		1-1/2	40	20	31.8	14.0	10.2	8.7	4.7	—	—	—	—	—	—	—	—
				30	40.6	20.2	15.0	12.8	7.0	—	—	—	—	—	—	—	—
				40	46.6	26.6	20.2	17.4	9.6	—	—	—	—	—	—	—	—
3	80	1-1/4	32	30	26.6	19.1	14.9	12.2	10.0	8.5	7.8	7.1	4.6	4.3	4.0	3.7	3.4
				40	29.4	23.3	19.0	16.0	13.4	11.5	10.5	9.6	6.4	5.9	5.5	5.1	4.7
				50	30.7	25.7	21.8	18.8	16.0	13.9	12.7	11.7	7.8	7.3	6.8	6.3	5.8
		1-1/2	40	30	41.5	27.5	20.8	16.8	13.7	11.5	9.0	7.7	6.0	5.4	4.3	3.7	3.4
				40	48.0	35.0	27.4	22.5	18.5	15.8	12.4	10.7	8.3	7.5	5.9	5.2	4.8
				50	51.5	39.9	32.2	27.0	22.4	19.2	15.2	13.1	10.2	9.3	7.3	6.4	5.9
		2	50	30	57.8	29.4	23.6	19.7	15.2	12.3	9.6	7.2	6.0	5.4	—	—	—
				40	69.4	39.1	31.9	26.8	20.9	16.9	13.3	10.0	8.3	7.5	—	—	—
				50	76.1	46.5	38.4	32.6	25.6	20.8	16.4	12.4	10.3	9.3	—	—	—
		2-1/2	65	30	71.8	30.0	23.9	19.9	15.3	12.3	—	—	—	—	—	—	—
				40	87.2	40.5	32.6	27.3	21.1	17.0	—	—	—	—	—	—	—
				50	96.3	48.9	39.7	33.4	26.0	21.0	—	—	—	—	—	—	—
4	100	1-1/2	40	40	48.0	38.1	33.7	31.3	29.7	28.7	25.8	24.1	16.8	16.0	14.4	12.4	11.6
				50	51.5	42.9	38.7	36.3	34.7	33.6	30.5	28.7	20.4	19.5	17.6	15.2	14.2
				60	54.0	47.0	43.2	40.9	39.4	38.4	35.2	33.3	24.3	23.3	21.1	18.3	17.2
				70	55.4	49.5	46.1	44.1	42.6	41.6	38.6	36.7	27.4	26.3	24.0	20.9	19.6
		2	50	40	69.4	50.2	43.5	42.7	40.3	37.6	28.7	25.3	20.1	17.8	14.7	12.5	11.7
				50	76.1	58.2	51.2	50.3	47.8	44.8	34.8	30.9	24.6	21.9	18.1	15.5	14.4
				60	81.3	65.5	58.7	57.8	55.2	52.2	41.3	36.9	29.7	26.5	22.0	18.8	17.6
				70	84.4	70.5	64.0	63.2	60.6	57.6	46.4	41.7	33.9	30.2	25.2	21.7	20.3
		2-1/2	65	40	91.9	54.3	49.4	45.1	42.3	39.2	30.9	22.9	20.3	18.0	—	—	—
				50	102.7	64.8	59.4	54.4	51.3	47.6	37.8	28.2	25.1	22.2	—	—	—
				60	111.7	75.5	69.7	64.3	60.8	56.8	45.5	34.2	30.5	27.0	—	—	—
				70	117.2	83.4	77.5	71.9	68.3	64.0	51.8	39.2	35.0	31.1	—	—	—
		3	80	40	104.3	55.6	50.4	45.8	42.9	39.7	29.6	23.0	19.6	—	—	—	—
				50	117.6	67.0	61.0	55.7	52.3	48.5	36.4	28.4	24.3	—	—	—	—
				60	129.0	79.0	72.4	66.5	62.6	58.2	44.1	34.5	29.6	—	—	—	—
				70	136.3	88.2	81.3	75.0	70.8	66.1	50.5	39.7	34.1	—	—	—	—
6	150	2-1/2	65	60	127.8	108.5	93.1	80.1	69.2	59.7	53.3	44.4	34.3	32.6	27.9	23.6	22.0
				70	130.6	114.5	100.5	87.9	77.0	67.1	60.2	50.6	39.3	37.4	32.1	27.2	25.4
				80	133.0	120.3	108.2	96.6	86.0	75.9	68.7	58.3	45.7	43.6	37.6	32.0	29.8
				90	134.3	123.5	112.8	102.0	91.8	81.8	74.4	63.7	50.3	48.1	41.5	35.4	33.1
		3	80	60	149.8	122.6	103.1	87.4	74.8	64.0	57.1	45.1	38.9	34.3	28.1	23.7	22.1
				70	153.7	130.6	112.3	96.8	83.8	72.4	64.9	51.6	44.6	39.5	32.4	27.4	25.5
				80	157.2	138.5	122.3	107.5	94.4	82.5	74.5	59.9	52.0	46.1	38.0	32.2	30.0
				90	159.1	143.0	128.3	114.3	101.4	89.4	81.2	65.8	57.3	51.0	42.1	35.8	33.4
		4	100	60	215.6	159.6	128.7	113.4	92.6	72.7	59.1	46.1	39.5	34.7	28.3	23.9	22.2
				70	223.5	173.4	142.9	127.0	104.8	83.0	67.8	53.0	45.5	40.1	32.7	27.6	25.7
				80	230.7	188.1	159.0	143.1	119.8	96.1	79.0	62.2	53.4	47.1	38.5	32.5	30.3
				90	234.5	196.9	169.4	153.7	130.1	105.3	87.1	68.8	59.3	52.3	42.8	36.2	33.7
		5-1/2	140	60	367.3	189.0	153.4	122.6	97.4	75.0	—	—	—	—	—	—	—
				70	387.7	213.2	174.6	140.4	112.0	86.4	—	—	—	—	—	—	—
				80	407.6	242.5	201.0	163.1	130.9	101.5	—	—	—	—	—	—	—
				90	418.7	262.3	219.4	179.4	144.7	112.6	—	—	—	—	—	—	—

GC300 ANSI 900#/1500#、PN160/PN250 行程及 Cv 值
Cv Values & Stroke for GC300 ANSI 900#/1500#, PN160/PN250

公称通径 Body Size		阀芯尺寸 Plug Size		行程 stroke	流关 Flow to Close (FTC) 降压级数 No. of Stages												
Inch	mm	Inch	mm	mm	0	2	4	6	8	10	12	14	16	18	20	22	24
8	200	4	100	60	215.6	167.3	136.4	113.4	95.8	81.2	73.5	63.5	45.4	43.5	37.1	37.1	33.9
				80	230.7	194.6	166.7	143.1	123.5	106.5	97.0	84.6	61.2	58.8	50.3	50.3	46.0
				100	237.5	209.7	185.4	163.1	143.4	125.4	115.1	101.2	74.2	71.4	61.2	61.2	56.1
				120	242.1	221.2	201.2	181.3	162.6	144.5	133.7	118.8	88.6	85.4	73.6	73.6	67.6
		5	125	60	316.9	226.1	178.3	149.3	124.7	105.1	84.4	67.7	54.8	49.9	41.7	37.3	34.1
				80	348.0	273.3	225.1	192.8	163.8	139.6	113.3	91.5	74.4	67.8	56.9	50.9	46.5
				100	362.9	301.8	256.8	224.2	193.4	166.6	136.7	111.1	90.7	82.9	69.6	62.3	57.0
				120	373.3	325.2	285.4	254.3	223.2	194.9	162.0	133.0	109.2	99.9	84.2	75.5	69.1
		6	150	60	427.8	248.3	199.1	163.9	131.8	107.0	85.5	68.3	55.1	50.1	41.9	37.4	34.1
				80	482.2	315.5	259.4	216.8	176.4	144.4	115.8	92.8	75.1	68.3	57.2	51.1	46.6
				100	509.8	361.8	304.0	257.8	212.1	174.9	141.1	113.5	92.0	83.8	70.2	62.7	57.3
				120	530.0	404.5	348.1	300.1	250.5	208.6	169.6	137.1	111.5	101.6	85.2	76.2	69.7
		7	175	60	538.7	259.5	204.7	167.0	133.4	107.9	85.9	65.4	55.2	50.2	—	—	—
				80	622.4	339.6	272.3	224.2	180.3	146.5	116.9	89.2	75.4	68.6	—	—	—
				100	667.4	399.6	325.4	270.4	219.0	178.7	143.1	109.4	92.6	84.2	—	—	—
				120	701.6	459.5	381.3	320.6	262.1	215.2	173.1	132.8	112.4	102.4	—	—	—
10	250	5	125	80	348.0	273.3	229.8	192.8	163.8	139.6	124.7	107.1	80.3	75.8	64.8	56.9	54.4
				100	362.9	301.8	261.3	224.2	193.4	166.6	149.8	129.4	97.9	92.4	79.2	69.6	66.6
				120	373.3	325.2	289.7	254.3	223.2	194.9	176.6	153.8	117.6	111.2	95.6	84.2	80.7
				140	379.1	339.6	308.3	275.4	245.1	216.5	197.4	173.2	133.7	126.6	109.3	96.4	92.4
		6	150	80	482.2	341.8	283.0	237.6	194.9	160.6	132.2	109.2	85.3	78.5	65.2	57.2	54.7
				100	509.8	387.5	328.8	280.6	233.2	193.9	160.5	133.2	104.4	96.2	80.0	70.2	67.1
				120	530.0	428.3	372.7	324.1	273.7	230.1	192.1	160.3	126.2	116.5	97.1	85.2	81.6
				140	541.4	454.8	403.4	356.1	304.8	258.9	217.8	182.6	144.5	133.5	111.5	98.0	93.8
		7	175	80	622.4	373.1	300.0	247.4	200.2	163.5	133.8	110.1	85.7	78.9	65.4	57.3	54.8
				100	667.4	435.1	356.3	297.2	242.5	199.1	163.5	134.8	105.2	96.8	80.4	70.4	67.3
				120	701.6	495.3	414.4	350.4	289.0	239.0	197.2	163.2	127.6	117.6	97.7	85.7	81.9
				140	721.4	537.8	457.9	391.9	326.4	271.7	225.2	187.0	146.7	135.2	112.5	98.6	94.4
		8	200	80	771.8	391.6	324.1	252.6	202.9	165.0	134.6	102.1	85.9	79.0	—	—	—
				100	838.1	465.2	389.2	306.3	247.4	201.7	164.9	125.4	105.6	97.1	—	—	—
				120	890.3	541.2	459.0	365.6	297.4	243.7	199.8	152.2	128.3	118.1	—	—	—
				140	921.1	598.1	513.2	413.5	338.6	278.6	229.1	175.0	147.7	136.0	—	—	—
12	300	6	150	120	482.2	—	—	—	—	—	—	—	—	—	—	—	—
				150	509.8	—	—	—	—	—	—	—	—	—	—	—	—
				180	530.0	—	—	—	—	—	—	—	—	—	—	—	—
				210	541.4	—	—	—	—	—	—	—	—	—	—	—	—
		7	175	120	701.6	—	—	—	—	—	—	—	—	—	—	—	—
				150	731.3	—	—	—	—	—	—	—	—	—	—	—	—
				180	747.4	—	—	—	—	—	—	—	—	—	—	—	—
				210	759.0	—	—	—	—	—	—	—	—	—	—	—	—
		8	200	120	890.3	—	—	—	—	—	—	—	—	—	—	—	—
				150	936.8	—	—	—	—	—	—	—	—	—	—	—	—
				180	962.7	—	—	—	—	—	—	—	—	—	—	—	—
				210	981.6	—	—	—	—	—	—	—	—	—	—	—	—
		10	250	120	1,301	—	—	—	—	—	—	—	—	—	—	—	—
				150	1,396	—	—	—	—	—	—	—	—	—	—	—	—
				180	1,452	—	—	—	—	—	—	—	—	—	—	—	—
				210	1,494	—	—	—	—	—	—	—	—	—	—	—	—

GC400 两段降压阀芯，流量特性为改良线性 ANSI 150#~600#/PN16~PN100 额定 Cv 值及行程
GC400 Rated Cv Values & Stroke for 2 Steps Plug, ANSI 150#~600#/PN16~PN100, Modified Linear Characteristic.

公称通径 Valve Size		阀芯尺寸 Plug Size		行程 Stroke	额定 Cv 值 Rated Cv		最小可控 CV 值 Min. Controllable Cv	阀型型式 Plug Type	
Inch	mm	Inch	mm	mm	Trim F	Trim R		平衡型 Balance	不平衡型 Unbalance
1	25	3/8	10	8	0.63	0.40			√
		1/2	12.5	8	1.2	0.9	0.03		√
		5/8	18	8	2.2	1.6	0.03		√
		3/4	20	8	3.3	2.5	0.06		√
1-1/2	40	5/8	18	8	2.2	1.6	0.03		√
		3/4	20	8	3.3	2.5	0.06		√
		1	25	12	5.0	4.0	0.11		√
2	50	1	25	12	5.0	4.0	0.11		√
		1-1/4	32	12	10.5	6.3	0.16		√
3	80	1-1/4	32	12	10.5	6.3	0.16		√
		1-1/2	40	16	18	13	0.32	√	
4	100	1-1/2	40	16	18	13	0.32	√	
		2	50	16	26	20	0.45	√	
6	150	3	80	25	47	36	0.80	√	
		4	100	25	65	50	0.98	√	
8	200	4	100	25	65	50	0.98	√	
		5	125	30	100	80	1.34	√	
10	250	5	125	30	100	80	1.34	√	
		6	150	30	151	120	1.61	√	
12	300	6	150	30	151	120	1.61	√	
		7	175	40	230	190	1.88	√	

ANSI 150#~600#、PN16~PN100 流向为流关时最大允许压差（单位：MPa）
ANSI 150#~600#, PN16~PN100 Allowable Pressure Drops for Flow to Close (Unit: MPa)

阀门口径与执行机构的标准组合请参见第 32~40 页。
See pages 32~40, for valve size & actuator size combinations.

薄膜式执行机构 Diaphragm Actuator (D100L)
填料：聚四氟乙烯纤维编织填料（P4525+P4519、禁油填料 P4525+P4390W2）
Packing: Teflon Fiber Braided Packing (P4525+P4519, P4525+P4390W2 for oil free)

执行机构尺寸 Actuator Size	气源压力/弹簧范围 Air Supply /Spring Range KPa G	阀座泄漏量 Seat Leakage	平衡密封环：强化聚四氟乙烯/S17700 Balance Seal Ring: Reinforced Teflon/S17700														
			阀芯尺寸 Plug Size (inch)														
			1/2	5/8	1	1.25	1.5	2	2.5	3	4	5	6	7	8	10	12
270	400/120~300	Class Ⅳ	9.89	9.89	9.89	9.89	9.89	8.34	—	—	—	—	—	—	—	—	—
		Class Ⅴ	9.89	9.89	5.05	1.75	0.11	—	—	—	—	—	—	—	—	—	—
		Class Ⅵ	9.89	9.89	9.89	9.89	9.89	8.34	—	—	—	—	—	—	—	—	—
350	400/120~280	Class Ⅳ	9.89	9.89	9.89	9.89	9.89	9.89	9.89	9.89	—	—	—	—	—	—	—
		Class Ⅴ	9.89	9.89	9.89	7.59	4.51	2.59	1.21	0.70	—	—	—	—	—	—	—
		Class Ⅵ	9.89	9.89	9.89	9.89	9.89	9.89	9.89	9.89	—	—	—	—	—	—	—
450	400/120~280	Class Ⅳ	—	—	9.89	9.89	9.89	9.89	9.89	9.89	9.89	9.89	9.89	8.48	6.83	—	—
		Class Ⅴ	—	—	9.89	9.89	9.89	8.29	5.90	5.00	3.15	1.55	0.49	—	—	—	—
		Class Ⅵ	—	—	9.89	9.89	9.89	9.89	9.89	9.89	9.89	9.89	9.89	8.48	6.83	—	—
550	400/120~280	Class Ⅳ	—	—	—	—	—	—	hold	hold	hold	hold	hold	hold	hold	hold	hold
		Class Ⅴ	—	—	—	—	—	—	hold	hold	hold	hold	hold	hold	hold	hold	hold
		Class Ⅵ	—	—	—	—	—	—	hold	hold	hold	hold	hold	hold	hold	hold	hold
650	300/80~200	Class Ⅳ	—	—	—	—	—	—	9.89	9.89	9.89	9.89	9.89	9.89	9.89	9.41	7.06
		Class Ⅴ	—	—	—	—	—	—	9.89	9.41	6.67	4.35	2.77	1.71	0.91	—	—
		Class Ⅵ	—	—	—	—	—	—	9.89	9.89	9.89	9.89	9.89	9.89	9.89	9.41	7.06

填料：柔性石墨填料（EVSP9000）、柔性石墨纤维编织填料（EDP17=P6710+P6617）
Packing: Graphite Packing (EVSP9000), Graphite Fiber Braided Packing (EDP17=P6710+P6617)

执行机构尺寸 Actuator Size	气源压力/弹簧范围 Air Supply /Spring Range KPa G	阀座泄漏量 Seat Leakage	平衡密封环：柔性石墨 Balance Seal Ring: Graphite														
			阀芯尺寸 Plug Size (inch)														
			1/2	5/8	1	1.25	1.5	2	2.5	3	4	5	6	7	8	10	12
270	400/120~300	Class Ⅳ	8.33	8.33	8.33	8.33	—	—	—	—	—	—	—	—	—	—	—
		Class Ⅴ	8.33	8.33	2.57	—	—	—	—	—	—	—	—	—	—	—	—
		Class Ⅵ	—	—	—	—	—	—	—	—	—	—	—	—	—	—	—
350	400/120~300	Class Ⅳ	8.33	8.33	8.33	8.33	8.33	8.33	8.33	8.33	—	—	—	—	—	—	—
		Class Ⅴ	8.33	8.33	8.33	5.82	2.72	0.79	—	—	—	—	—	—	—	—	—
		Class Ⅵ	—	—	—	—	—	—	—	—	—	—	—	—	—	—	—
450	400/120~280	Class Ⅳ	—	—	8.33	8.33	8.33	8.33	8.33	8.33	8.33	8.33	—	—	—	—	—
		Class Ⅴ	—	—	8.33	8.33	8.33	6.86	4.56	3.46	1.32	—	—	—	—	—	—
		Class Ⅵ	—	—	—	—	—	—	—	—	—	—	—	—	—	—	—
550	400/120~280	Class Ⅳ	—	—	—	—	—	—	hold	hold	hold	hold	hold	hold	hold	hold	hold
		Class Ⅴ	—	—	—	—	—	—	hold	hold	hold	hold	hold	hold	hold	hold	hold
		Class Ⅵ	—	—	—	—	—	—	—	—	—	—	—	—	—	—	—
650	300/80~200	Class Ⅳ	—	—	—	—	—	—	8.33	8.33	8.33	8.33	8.33	8.33	7.04	2.09	—
		Class Ⅴ	—	—	—	—	—	—	8.33	7.70	4.76	2.37	—	—	—	—	—
		Class Ⅵ	—	—	—	—	—	—	—	—	—	—	—	—	—	—	—

活塞式执行机构 Piston Actuator (P100LA)
填料：聚四氟乙烯纤维编织填料（P4525+P4519、禁油填料 P4525+P4390W2）
Packing: Teflon Fiber Braided Packing (P4525+P4519, P4525+P4390W2 for oil free)

执行机构尺寸 Actuator Size	气源压力 Air Supply KPa G	阀座泄漏量 Seat Leakage	平衡密封环：强化聚四氟乙烯/S17700 Balance Seal Ring: Reinforced Teflon/S17700												
			阀芯尺寸 Plug Size (inch)												
			2.5	3	4	5	6	7	8	10	12	13	14	16	18
300	400	Class Ⅳ	9.89	9.89	9.89	9.89	9.89	9.89	9.89	9.89	9.89	—	—	—	—
		Class Ⅴ	9.89	9.89	9.89	9.89	8.22	6.37	4.99	3.06	1.77	—	—	—	—
		Class Ⅵ	9.89	9.89	9.89	9.89	9.89	9.89	9.89	9.89	9.89	—	—	—	—
	500	Class Ⅳ	9.89	9.89	9.89	9.89	9.89	9.89	9.89	9.89	9.89	—	—	—	—
		Class Ⅴ	9.89	9.89	9.89	9.89	9.89	9.24	7.50	5.06	3.44	—	—	—	—
		Class Ⅵ	9.89	9.89	9.89	9.89	9.89	9.89	9.89	9.89	9.89	—	—	—	—
450	400	Class Ⅳ	—	—	—	—	9.89	9.89	9.89	9.89	9.89	9.89	9.89	9.89	9.89
		Class Ⅴ	—	—	—	—	9.89	9.89	9.89	9.89	9.89	9.89	9.89	7.79	6.23
		Class Ⅵ	—	—	—	—	9.89	9.89	9.89	9.89	9.89	9.89	9.89	9.89	9.89
	500	Class Ⅳ	—	—	—	—	9.89	9.89	9.89	9.89	9.89	9.89	9.89	9.89	9.89
		Class Ⅴ	—	—	—	—	9.89	9.89	9.89	9.89	9.89	9.89	9.89	9.89	9.05
		Class Ⅵ	—	—	—	—	9.89	9.89	9.89	9.89	9.89	9.89	9.89	9.89	9.89
600	400	Class Ⅳ	—	—	—	—	9.89	9.89	9.89	9.89	9.89	9.89	9.89	9.89	9.89
		Class Ⅴ	—	—	—	—	9.89	9.89	9.89	9.89	9.89	9.89	9.89	9.89	9.89
		Class Ⅵ	—	—	—	—	9.89	9.89	9.89	9.89	9.89	9.89	9.89	9.89	9.89
	500	Class Ⅳ	—	—	—	—	9.89	9.89	9.89	9.89	9.89	9.89	9.89	9.89	9.89
		Class Ⅴ	—	—	—	—	9.89	9.89	9.89	9.89	9.89	9.89	9.89	9.89	9.89
		Class Ⅵ	—	—	—	—	9.89	9.89	9.89	9.89	9.89	9.89	9.89	9.89	9.89

填料：柔性石墨填料（EVSP9000）、柔性石墨纤维编织填料（EDP17=P6710+P6617）
Packing: Graphite Packing (EVSP9000), Graphite Fiber Braided Packing (EDP17=P6710+P6617)

执行机构尺寸 Actuator Size	气源压力 Air Supply KPa G	阀座泄漏量 Seat Leakage	平衡密封环：柔性石墨 Balance Seal Ring: Graphite												
			阀芯尺寸 Plug Size (inch)												
			2.5	3	4	5	6	7	8	10	12	13	14	16	18
300	400	Class Ⅳ	8.33	8.33	8.33	8.33	—	—	—	—	—	—	—	—	—
		Class Ⅴ	8.33	8.33	8.33	8.33	—	—	—	—	—	—	—	—	—
		Class Ⅵ	—	—	—	—	—	—	—	—	—	—	—	—	—
	500	Class Ⅳ	8.33	8.33	8.33	8.33	—	—	—	—	—	—	—	—	—
		Class Ⅴ	8.33	8.33	8.33	8.33	—	—	—	—	—	—	—	—	—
		Class Ⅵ	—	—	—	—	—	—	—	—	—	—	—	—	—
450	400	Class Ⅳ	—	—	—	—	8.33	8.33	8.33	8.33	8.33	8.33	8.33	—	—
		Class Ⅴ	—	—	—	—	8.33	8.33	8.33	8.33	8.08	7.10	6.86	—	—
		Class Ⅵ	—	—	—	—	—	—	—	—	—	—	—	—	—
	500	Class Ⅳ	—	—	—	—	8.33	8.33	8.33	8.33	8.33	8.33	8.33	—	—
		Class Ⅴ	—	—	—	—	8.33	8.33	8.33	8.33	8.33	8.33	8.33	—	—
		Class Ⅵ	—	—	—	—	—	—	—	—	—	—	—	—	—
600	400	Class Ⅳ	—	—	—	—	8.33	8.33	8.33	8.33	8.33	8.33	8.33	8.33	8.33
		Class Ⅴ	—	—	—	—	8.33	8.33	8.33	8.33	8.33	8.33	8.33	8.33	8.33
		Class Ⅵ	—	—	—	—	—	—	—	—	—	—	—	—	—
	500	Class Ⅳ	—	—	—	—	8.33	8.33	8.33	8.33	8.33	8.33	8.33	8.33	8.33
		Class Ⅴ	—	—	—	—	8.33	8.33	8.33	8.33	8.33	8.33	8.33	8.33	8.33
		Class Ⅵ	—	—	—	—	—	—	—	—	—	—	—	—	—

备注：金属阀座泄漏量是 Class Ⅵ、Ⅴ，软阀座泄漏量是 Class Ⅵ，GC100 软阀座最大允许压差为 3.00MPa。
Note: Seat leakage Class Ⅵ,Ⅴ is for metal seat, Class Ⅵ is for soft seat, allowable pressure drops for soft seat of GC100 is 3.00MPa.

控制阀安装方位（带 D100LB/LC 气动薄膜式执行机构）
MOUNTING FORMS FOR D100LB/LC

执行机构尺寸：Φ270~Φ450
ACTUATOR SIZE: Φ270~Φ450

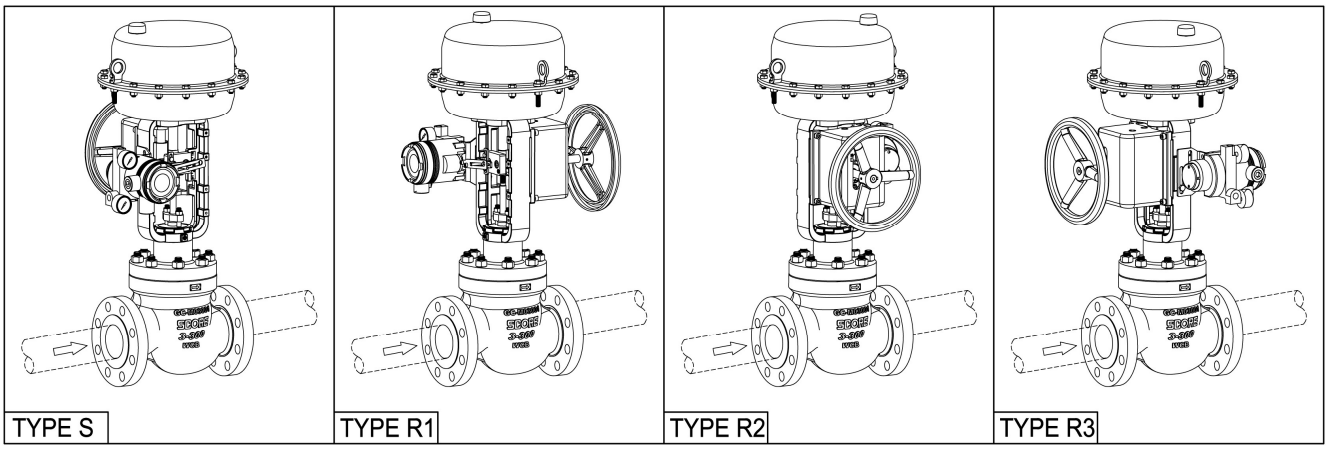

执行机构尺寸：Φ650
ACTUATOR SIZE: Φ650

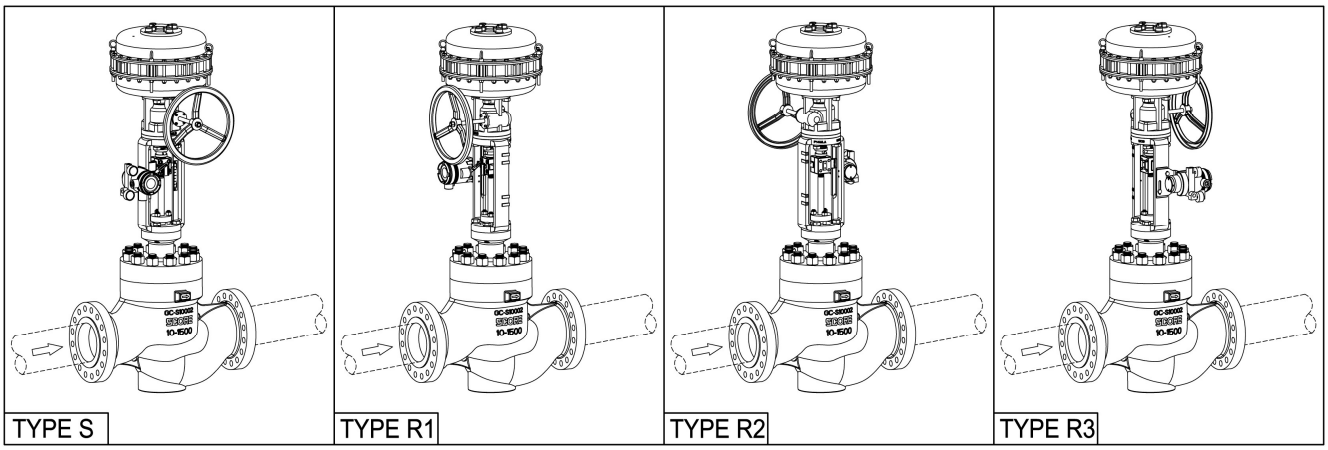

控制阀安装方位（带 P100LA 气动活塞式双动作执行机构）
MOUNTING FORMS FOR P100LA DOUBLE ACTING

执行机构尺寸：Φ200~Φ600
ACTUATOR SIZE: Φ200~Φ600

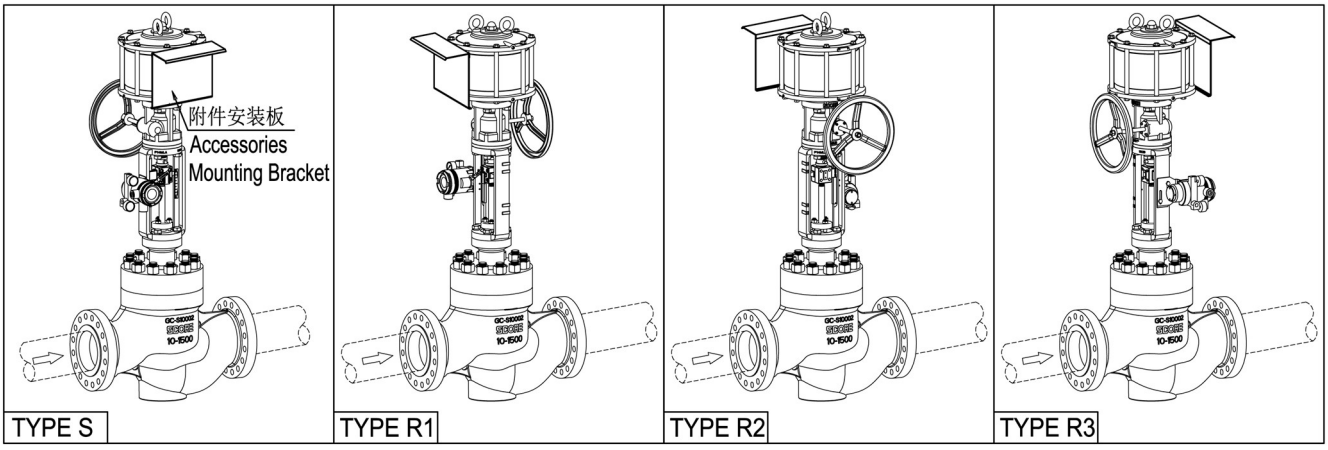

注：如客户没有指定，则默认 TYPE S 出厂。
Note: Type S is automatically applied, unless otherwise specified.

ANSI 150#~600#、PN16~PN100 与标准执行机构组合时的产品重量（单位：kg）
ANSI 150#~600#, PN16~PN100 NET WEIGHT OF VALVE WITH STANDARD ACTUATOR

(UNIT: kg)

表中所列重量，均为本体部和执行机构的标准产品重量，不包括手轮机构、附件等。
Only standard types are represented, Weights of a handwheel, accessories and so on are not included.

公称通径 Valve Size		公称压力 Valve Rating		D100L 系列薄膜式执行机构 Diaphragm Actuator Size						P100LA 系列双动作气缸式执行机构 Double Acting Cylinder Actuator Size				
Inch	mm	ANSI Class	PN	270	350	450S	450L	650S	650L	200	300	370	450	600
1	25	150	16	24	40	—	—	—	—	—	—	—	—	—
		300	25、40	25	41	—	—	—	—	—	—	—	—	—
		600	63、100	26	42	—	—	—	—	—	—	—	—	—
1-1/2	40	150	16	36	52	—	—	—	—	—	—	—	—	—
		300	25、40	41	57	—	—	—	—	—	—	—	—	—
		600	63、100	46	62	—	—	—	—	—	—	—	—	—
2	50	150	16	41	57	92	—	—	—	—	—	—	—	—
		300	25、40	46	62	97	—	—	—	—	—	—	—	—
		600	63、100	51	67	102	—	—	—	—	—	—	—	—
3	80	150	16	56	72	107	—	—	—	—	—	—	—	—
		300	25、40	66	82	117	—	—	—	—	—	—	—	—
		600	63、100	91	107	142	—	—	—	—	—	—	—	—
4	100	150	16	—	82	117	139	242	—	—	—	—	—	—
		300	25、40	—	97	132	154	257	—	—	—	—	—	—
		600	63、100	—	142	177	199	302	—	—	—	—	—	—
6	150	150	16	—	—	—	200	322	353	185	220	—	—	—
		300	25、40	—	—	—	230	352	383	215	250	—	—	—
		600	63、100	—	—	—	280	402	433	275	310	—	—	—
8	200	150	16	—	—	—	280	—	433	285	320	—	426	—
		300	25、40	—	—	—	330	—	483	295	330	—	436	—
		600	63、100	—	—	—	450	—	603	405	440	—	546	—
10	250	150	16	—	—	—	470	—	603	—	460	—	566	—
		300	25、40	—	—	—	550	—	683	—	540	—	646	—
		600	63、100	—	—	—	790	—	923	—	780	—	886	—
12	300	150	16	—	—	—	—	—	773	—	630	—	736	838
		300	25、40	—	—	—	—	—	853	—	710	—	816	918
		600	63、100	—	—	—	—	—	1,143	—	1,000	—	1,106	1,208
14	350	150	16	—	—	—	—	—	1,045	—	—	—	1,070	1,190
		300	25、40	—	—	—	—	—	1,205	—	—	—	1,230	1,350
		600	63、100	—	—	—	—	—	1,705	—	—	—	1,730	1,850
16	400	150	16	—	—	—	—	—	—	—	—	—	1,530	1,650
		300	25、40	—	—	—	—	—	—	—	—	—	1,930	2,050
		600	63、100	—	—	—	—	—	—	—	—	—	2,730	2,850
18	450	150	16	—	—	—	—	—	—	—	—	—	2,230	2,350
		300	25、40	—	—	—	—	—	—	—	—	—	2,930	3,050
		600	63、100	—	—	—	—	—	—	—	—	—	4,230	4,350
20	500	150	16	—	—	—	—	—	—	—	—	—	—	—
		300	25、40	—	—	—	—	—	—	—	—	—	—	—
		600	63、100	—	—	—	—	—	—	—	—	—	—	—
24	600	150	16	—	—	—	—	—	—	—	—	—	—	—
		300	25、40	—	—	—	—	—	—	—	—	—	—	—
		600	63、100	—	—	—	—	—	—	—	—	—	—	—

ANSI 900#~2500#/PN160~PN400 与标准执行机构组合时的产品重量（单位：kg）
ANSI 900#~2500#/PN160~PN400 NET WEIGHT OF VALVE WITH STANDARD ACTUATOR (UNIT: kg)

表中所列重量，均为本体部和执行机构的标准产品重量，不包括手轮机构、附件等。
Only standard types are represented, Weights of a handwheel, accessories and so on are not included.

标准型上阀盖 Standard Bonnet

公称通径 Valve Size		公称压力 Valve Rating		D100L 薄膜式执行机构 Diaphragm Actuator Size						P100LA 双动作气缸式执行机构 Double Acting Cylinder Actuator Size				
Inch	mm	ANSI Class	PN	270	350	450S	450L	650S	650L	200	300	370	450	600
1	25	900、1500	160、250	71	87	115	—	—	—	105	—	—	—	—
		2500	320、400	86	102	130	—	—	—	120	—	—	—	—
1-1/2	40	900、1500	160、250	96	112	140	—	—	—	130	165	—	—	—
		2500	320、400	121	137	165	—	—	—	155	190	—	—	—
2	50	900、1500	160、250	—	147	175	—	—	—	165	200	—	—	—
		2500	320、400	—	182	210	—	—	—	200	235	—	—	—
3	80	900、1500	160、250	—	257	285	—	—	—	275	310	—	—	—
		2500	320、400	—	322	350	—	—	—	340	375	—	—	—
4	100	900、1500	160、250	—	—	328	350	455	—	—	380	—	485	—
		2500	320、400	—	—	418	440	545	—	—	465	—	570	—
6	150	900、1500	160、250	—	—	—	525	630	661	—	—	—	660	765
		2500	320、400	—	—	—	635	740	771	—	—	—	770	870
8	200	900、1500	160、250	—	—	—	725	830	861	—	—	—	850	950
		2500	320、400	—	—	—	875	980	1,011	—	—	—	945	1,050
10	250	900、1500	160、250	—	—	—	—	—	1,263	—	—	—	1,290	1,390
		2500	320、400	—	—	—	—	—	1,490	—	—	—	1,520	1,640
12	300	900、1500	160、250	—	—	—	—	—	1,778	—	—	—	1,805	1,905
		2500	320、400	—	—	—	—	—	—	—	—	—	—	—

散热片型上阀盖 Fin-Extension Bonnet

公称通径 Valve Size		公称压力 Valve Rating		D100L 薄膜式执行机构 Diaphragm Actuator Size						P100LA 双动作气缸式执行机构 Double Acting Cylinder Actuator Size				
Inch	mm	ANSI Class	PN	270	350	450S	450L	650S	650L	200	300	370	450	600
1	25	900、1500	160、250	76	92	120	—	—	—	—	—	—	—	—
		2500	320、400	91	107	135	—	—	—	—	—	—	—	—
1-1/2	40	900、1500	160、250	101	117	145	—	—	—	—	170	—	—	—
		2500	320、400	126	142	170	—	—	—	—	195	—	—	—
2	50	900、1500	160、250	—	157	185	—	—	—	—	210	—	—	—
		2500	320、400	—	192	220	—	—	—	—	245	—	—	—
3	80	900、1500	160、250	—	267	295	—	—	—	—	320	—	—	—
		2500	320、400	—	332	360	—	—	—	—	395	—	—	—
4	100	900、1500	160、250	—	—	358	380	485	—	—	405	—	510	—
		2500	320、400	—	—	473	465	570	—	—	495	—	600	—
6	150	900、1500	160、250	—	—	—	560	665	695	—	—	—	690	795
		2500	320、400	—	—	—	670	775	806	—	—	—	810	915
8	200	900、1500	160、250	—	—	—	—	—	—	—	—	—	895	1,000
		2500	320、400	—	—	—	920	1,025	1,056	—	—	—	995	1,100
10	250	900、1500	160、250	—	—	—	—	—	—	—	—	—	—	1,450
		2500	320、400	—	—	—	—	—	—	—	—	—	—	1,600
12	300	900、1500	160、250	—	—	—	—	—	—	—	—	—	—	1,985
		2500	320、400	—	—	—	—	—	—	—	—	—	—	—

GLOBE-VALVE *DIRECT ACTION*

*1 AIR EXHAUST POSITION FOR Ø220 & Ø270
*2 AIR EXHAUST POSITION FOR Ø350 & Ø450

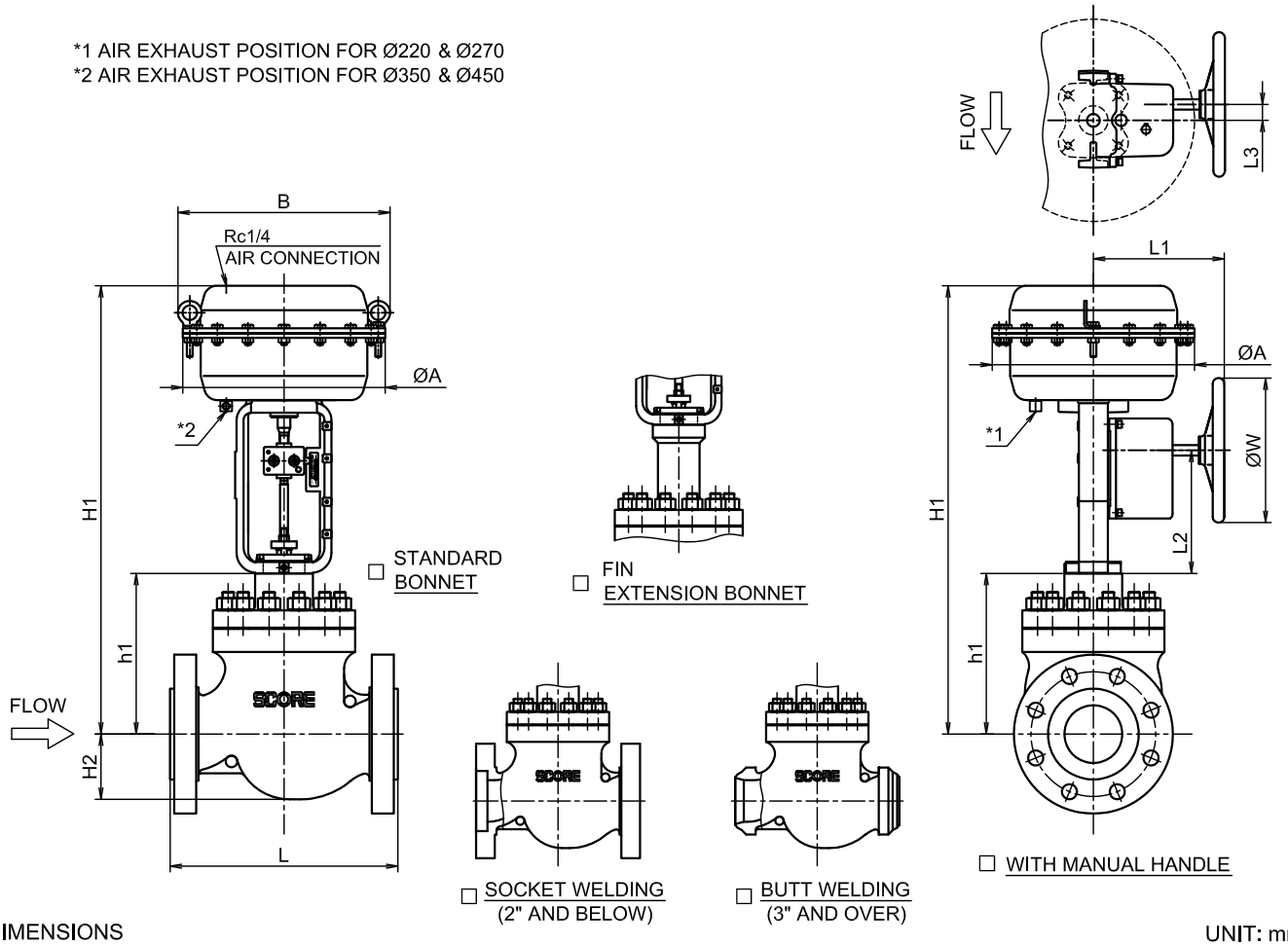

DIMENSIONS

UNIT: mm

VALVE SIZE		☐ANSI 150# RF ☐PN16 RF		☐ANSI 300# ☐PN25 ☐PN40				☐ANSI 600# ☐PN63 ☐PN100			☐ STANDARD BONNET		☐ FIN EXTENSION BONNET		ACTUATOR						
				☐RF ☐FM	☐SW ☐BW	☐RJ		☐RF ☐FM ☐SW ☐BW	☐RJ						SIZE		WITH MANUAL HANDLE				
CODE NO.		L	H2	L	L	L	H2	L	L	H2	h1	H1	h1	H1	A	B	L1	L2	L3	ØW	CODE NO.
01	☐ 1"	184	43	197	210	210	43	210	210	43	176	601	276	701	☐270	283	230	185-165	27.5	250	D127LC
												671		771	☐350	367	230	193-173	27.5	250	D135LC
93	☐1½"	222	50	235	251	248	51	251	251	52	184	609	284	709	☐270	283	230	190-165	27.5	250	D127LC
												679		779	☐350	367	230	198-173	27.5	250	D135LC
												699		799	☐450	472	300	205-180	32.0	320	D14SLC
02	☐ 2"	254	70	267	286	283	71	286	289	72	205	630	305	730	☐270	283	230	195-165	27.5	250	D127LC
												700		800	☐350	367	230	203-173	27.5	250	D135LC
												720		820	☐450	472	300	210-180	32.0	320	D14SLC
03	☐ 3" ×2"	298	90	317	317	333	92	337	340	94	228	653	328	753	☐270	283	230	195-165	27.5	250	D127LC
	☐ 3"& 3"×2½"											723		823	☐350	367	230	203-173 213-173	27.5	250	D135LC
												743		843	☐450	472	300	220-180	32.0	320	D14SLC
04	☐ 4" ×Red	352	118	368	368	384	130	394	397	140	278	773	378	873	☐350	367	230	213-173	27.5	250	D135LC
												793		893	☐450	472	300	220-180	32.0	320	D14SLC

* FACE TO FACE : L (ISA-75.03-1992)
* FLANGE IS ACCORDING TO THE STANDARD WHICH IS DESCRIBED ON SPECIFICATION SHEET .

2						DR	Feng 2016.02.15	DWG NO.	
1						CH		E-GC100-D100LC-D-N/S	
No.	DESCRIPTION	REV. BY	CH	APP	DATE	APP		REV.	SCORE
	REVISIONS					DATE		A	

GLOBE-VALVE *REVERSE ACTION*

*1 AIR EXHAUST POSITION FOR Ø220 & Ø270
*2 AIR EXHAUST POSITION FOR Ø350 & Ø450

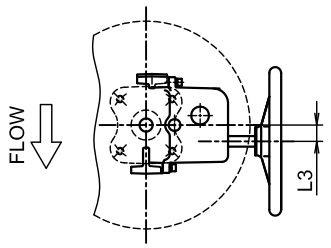

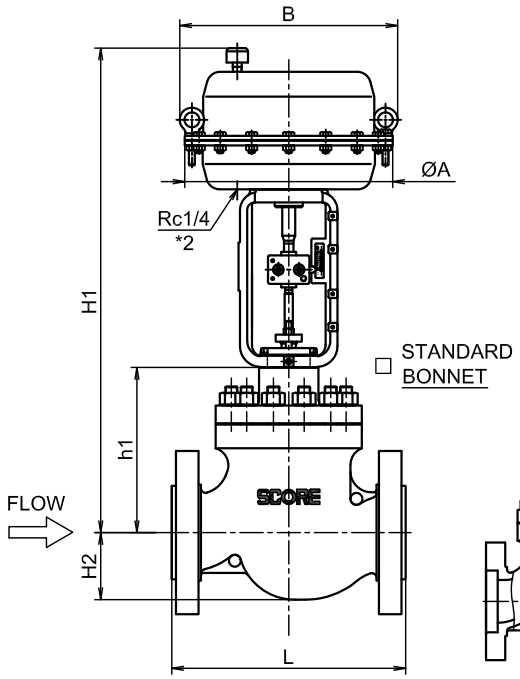

☐ STANDARD BONNET

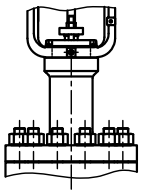

☐ FIN EXTENSION BONNET

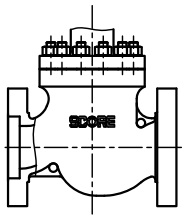

☐ SOCKET WELDING (2" AND BELOW)

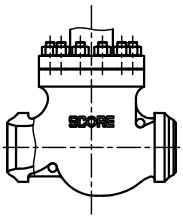

☐ BUTT WELDING (3" AND OVER)

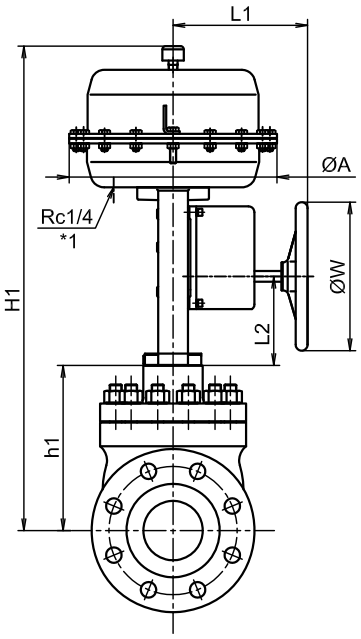

☐ WITH MANUAL HANDLE

DIMENSIONS

UNIT: mm

VALVE SIZE		☐ANSI 150# RF ☐PN16 RF		☐ANSI 300# ☐PN25 ☐PN40				☐ANSI 600# ☐PN63 ☐PN100			☐ STANDARD BONNET		☐ FIN EXTENSION BONNET		ACTUATOR						
				☐RF ☐FM	☐SW ☐BW	☐RJ		☐RF ☐FM ☐SW ☐BW	☐RJ						SIZE		WITH MANUAL HANDLE				
CODE NO.		L	H2	L	L	L	H2	L	L	H2	h1	H1	h1	H1	A	B	L1	L2	L3	ØW	CODE NO.
01	☐ 1"	184	43	197	210	210	43	210	210	43	176	641	276	741	☐270	283	230	148-168	27.5	250	D127LC
												711		811	☐350	367	230	150-170	27.5	250	D135LC
93	☐1½"	222	50	235	251	248	51	251	251	52	184	649	284	749	☐270	283	230	148-173	27.5	250	D127LC
												719		819	☐350	367	230	150-175	27.5	250	D135LC
												739		839	☐450	472	300	160-185	32.0	320	D14SLC
02	☐ 2"	254	70	267	286	283	71	286	289	72	205	670	305	770	☐270	283	230	148-178	27.5	250	D127LC
												740		840	☐350	367	230	150-180	27.5	250	D135LC
												760		860	☐450	472	300	160-190	32.0	320	D14SLC
03	☐ 3" ×2"	298	90	317	317	333	92	337	340	94	228	693	328	793	☐270	283	230	148-178	27.5	250	D127LC
	☐ 3"& 3"×2½"											763		863	☐350	367	230	150-180 150-190	27.5	250	D135LC
												783		883	☐450	472	300	160-200	32.0	320	D14SLC
04	☐ 4" ×Red	352	118	368	368	384	130	394	397	140	278	813	378	913	☐350	367	230	150-190	27.5	250	D135LC
												833		933	☐450	472	300	160-200	32.0	320	D14SLC

* FACE TO FACE : L (ISA-75.03-1992)
* FLANGE IS ACCORDING TO THE STANDARD WHICH IS DESCRIBED ON SPECIFICATION SHEET .

2						DR	Feng 2016.02.15	DWG NO.	
1						CH		E-GC100-D100LC-R-N/S	
No.	DESCRIPTION	REV. BY	CH	APP	DATE	APP		REV.	SCORE
	REVISIONS					DATE		A	

GLOBE-VALVE *DIRECT ACTION*

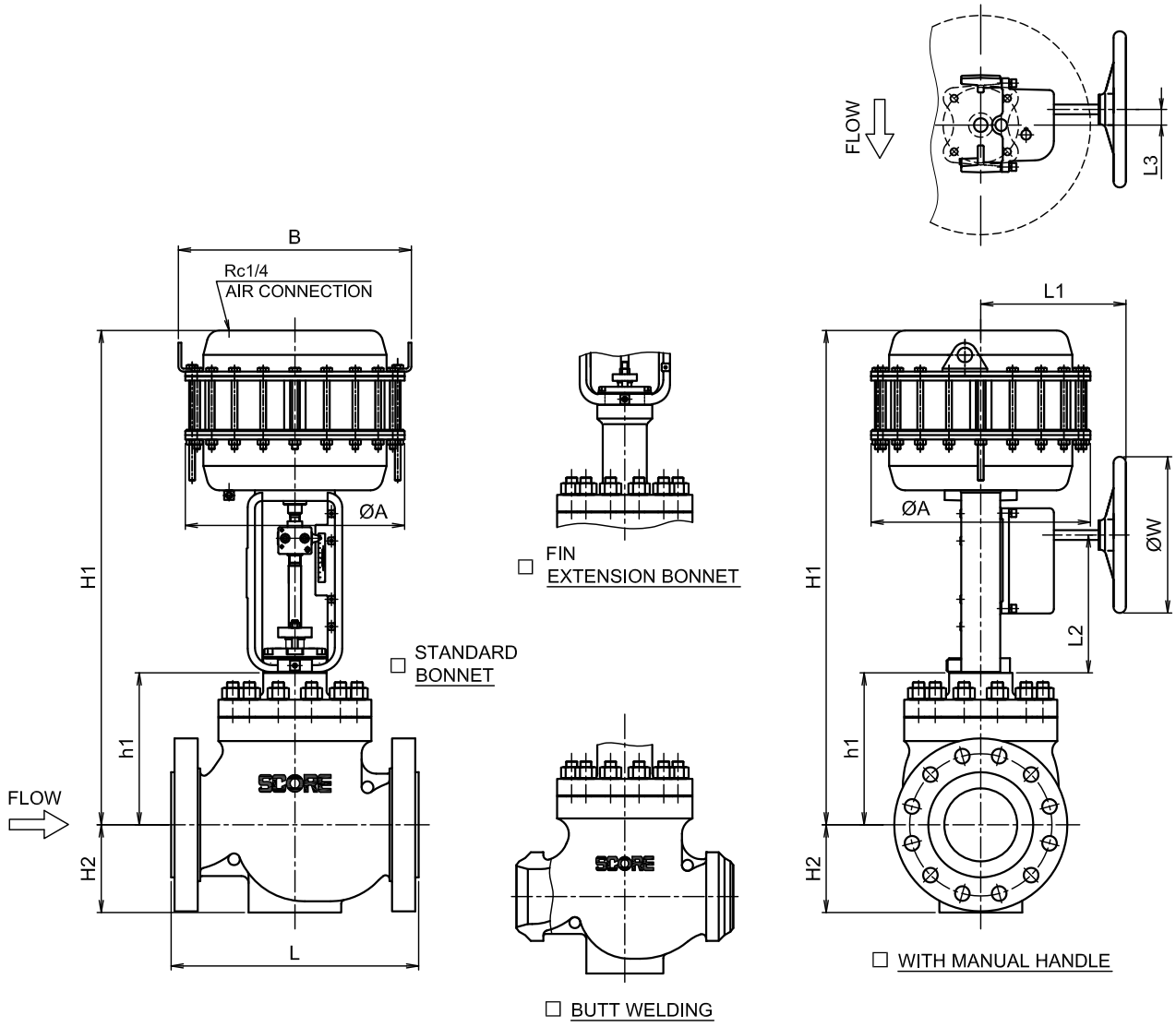

DIMENSIONS

UNIT: mm

VALVE SIZE		☐ANSI 150# RF ☐PN16 RF		☐ANSI 300# ☐PN25 ☐PN40			☐ANSI 600# ☐PN63 ☐PN100			☐ STANDARD BONNET		☐ FIN EXTENSION BONNET		ACTUATOR						
				☐RF ☐FM ☐BW	☐RJ		☐RF ☐FM ☐BW	☐RJ						SIZE		WITH MANUAL HANDLE				
CODE NO.		L	H2	L	L	H2	L	L	H2	h1	H1	h1	H1	A	B	L1	L2	L3	ØW	CODE NO.
04	☐ 4"	352	118	368	384	130	394	397	140	278	963	378	1063	450	480	300	230-180	32	320	D14LLC
06	☐ 6"	451	154	473	489	162	508	511	180	312	997	412	1097				250-180			D14LLC
08	☐ 8"×Red	543	190	568	584	197	610	613	220	399	1104	499	1204				280-200			D14ELC
	☐ 8"										1134		1234				290-200			D14XLC
10	☐ 10"×8"	673	228	708	724	228	752	756	258	441	1176	541	1276				290-200			D14XLC

* FACE TO FACE : L (ISA-75.03-1992)
* FLANGE IS ACCORDING TO THE STANDARD WHICH IS DESCRIBED ON SPECIFICATION SHEET .

2						DR	Feng 2016.02.15	DWG NO.	
1						CH		E-GC100-D14LLC-D-N/S	
No.	DESCRIPTION	REV. BY	CH	APP	DATE	APP		REV.	SCORE
	REVISIONS					DATE		A	

GLOBE-VALVE *REVERSE ACTION*

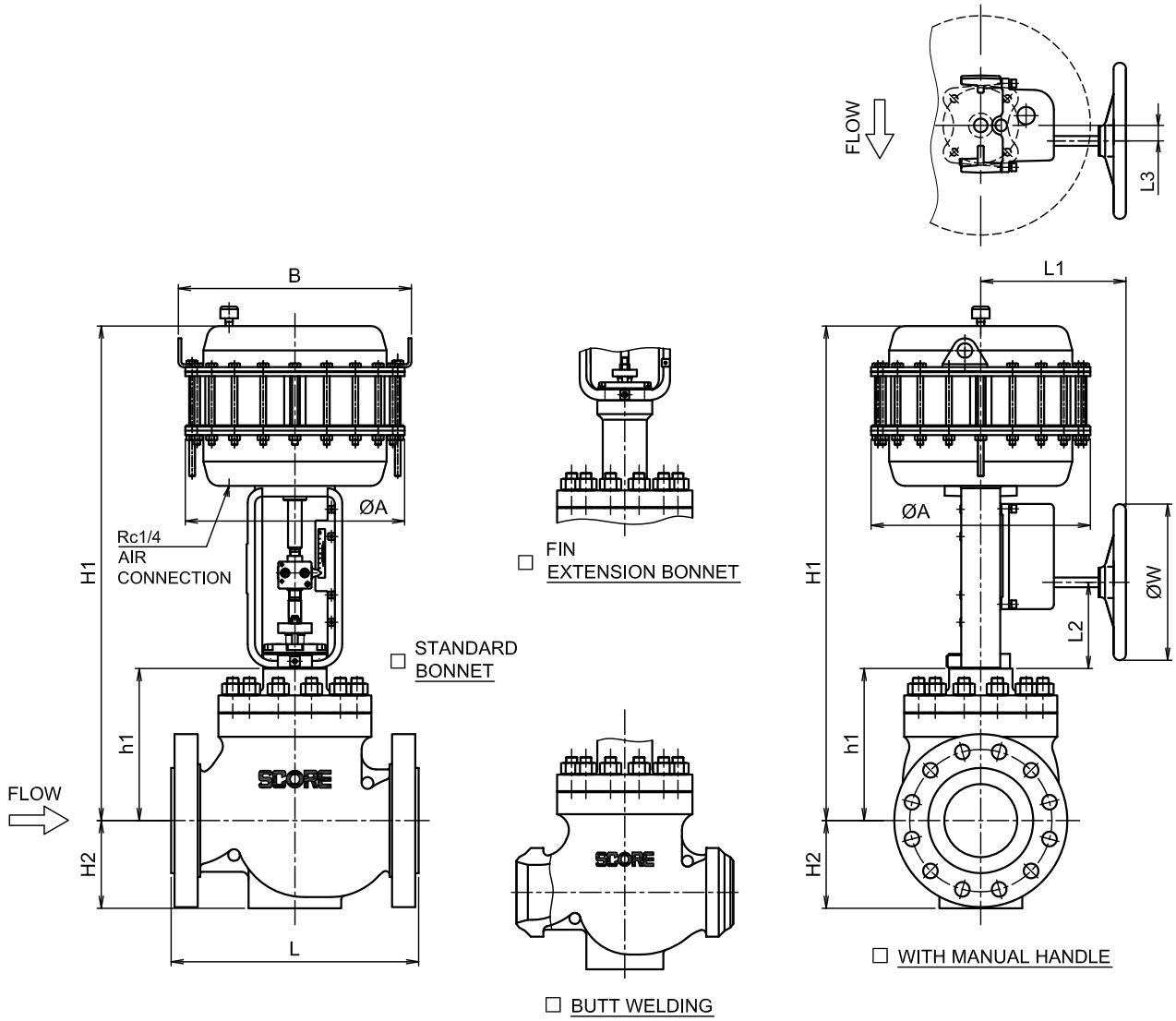

DIMENSIONS

UNIT: mm

VALVE SIZE		☐ANSI 150# RF ☐PN16 RF		☐ANSI 300# ☐PN25 ☐PN40 ☐RF ☐FM ☐BW	☐RJ		☐ANSI 600# ☐PN63 ☐PN100 ☐RF ☐FM ☐BW	☐RJ		☐ STANDARD BONNET		☐ FIN EXTENSION BONNET		ACTUATOR SIZE		WITH MANUAL HANDLE				
CODE NO.		L	H2	L	L	H2	L	L	H2	h1	H1	h1	H1	A	B	L1	L2	L3	ØW	CODE NO.
04	☐ 4"	352	118	368	384	130	394	397	140	278	1003	378	1103	450	480	300	160-210	32	320	D14LLC
06	☐ 6"	451	154	473	489	162	508	511	180	312	1037	412	1137				160-230			D14LLC
08	☐ 8"×Red	543	190	568	584	197	610	613	220	399	1144	499	1244				180-260			D14ELC
	☐ 8"										1174		1274				180-270			D14XLC
10	☐ 10"×8"	673	228	708	724	228	752	756	258	441	1216	541	1316				180-270			D14XLC

* FACE TO FACE : L (ISA-75.03-1992)
* FLANGE IS ACCORDING TO THE STANDARD WHICH IS DESCRIBED ON SPECIFICATION SHEET .

2						DR	Feng 2016.02.15	DWG NO.	
1						CH		E-GC100-D14LLC-R-N/S	
No.	DESCRIPTION	REV. BY	CH	APP	DATE	APP		REV.	SCORE
	REVISIONS					DATE		A	

GLOBE-VALVE *DIRECT ACTION*

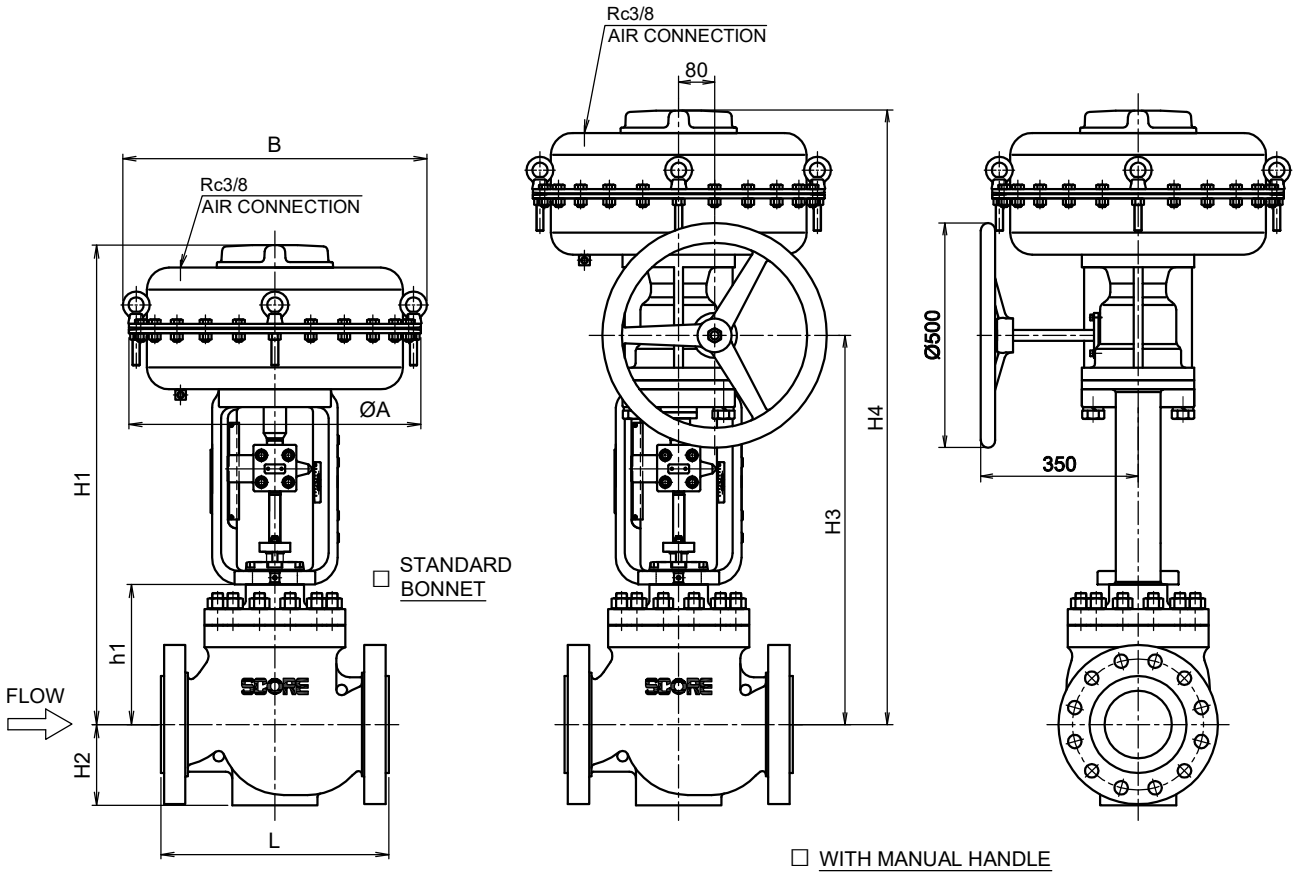

DIMENSIONS

UNIT: mm

VALVE SIZE		☐ANSI 150# RF ☐PN16 RF		☐ANSI 300# ☐PN25 ☐PN40			☐ANSI 600# ☐PN63 ☐PN100			☐ STANDARD BONNET		☐ FIN EXTENSION BONNET		ACTUATOR						
				☐RF ☐FM ☐BW	☐RJ		☐RF ☐FM ☐BW	☐RJ						SIZE		☐WITH MANUAL HANDLE				CODE NO.
																☐ STD BONNET		☐ FIN/EXT BONNET		
CODE NO.		L	H2	L	L	H2	L	L	H2	h1	H1	h1	H1	A	B	H3	H4	H3	H4	
04	☐ 4"	352	118	368	384	130	394	397	140	278	1038	378	1138	650	680	863	1393	963	1493	D16SLB
06	☐ 6"×Red	451	154	473	489	162	508	511	180	312	1072	412	1172			897	1427	997	1527	

* FACE TO FACE : L (ISA-75.03-1992)
* FLANGE IS ACCORDING TO THE STANDARD WHICH IS DESCRIBED ON SPECIFICATION SHEET .

2						DR	Feng 2016.09.21	DWG NO.	
1						CH		E-GC100-D16SLB-D-N/S	
No.	DESCRIPTION	REV. BY	CH	APP	DATE	APP		REV.	SCORE
	REVISIONS					DATE		A	

GLOBE-VALVE *REVERSE ACTION*

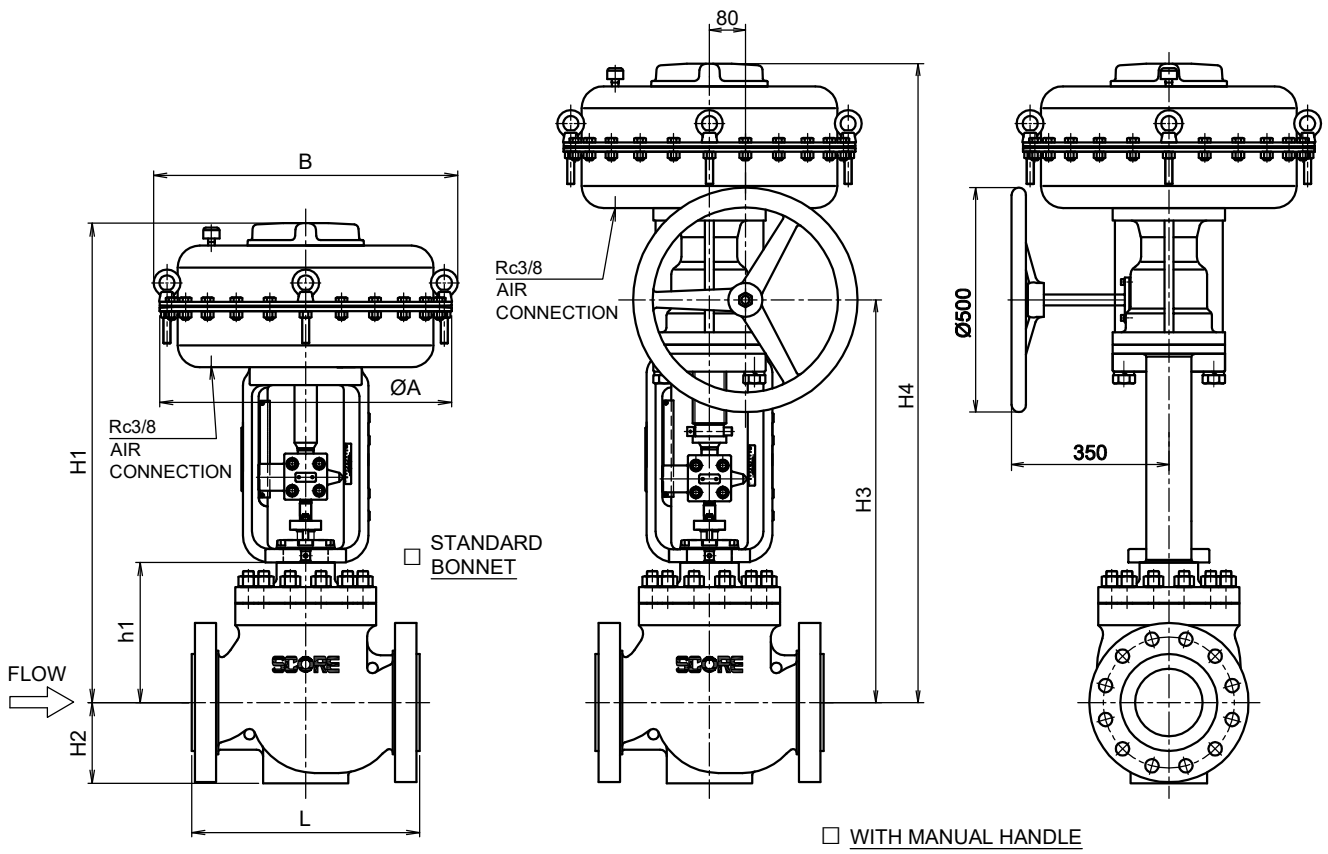

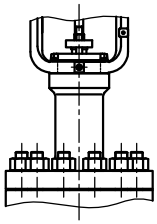

☐ FIN EXTENSION BONNET

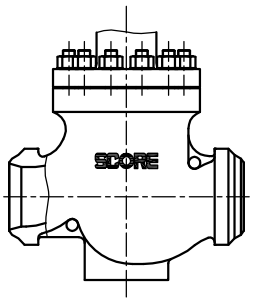

☐ BUTT WELDING

DIMENSIONS

UNIT: mm

VALVE SIZE		☐ANSI 150# RF ☐PN16 RF		☐ANSI 300# ☐PN25 ☐PN40			☐ANSI 600# ☐PN63 ☐PN100			☐ STANDARD BONNET		☐ FIN EXTENSION BONNET		ACTUATOR						
				☐RF ☐FM ☐BW	☐RJ		☐RF ☐FM ☐BW	☐RJ						SIZE		☐WITH MANUAL HANDLE				
																☐ STD BONNET		☐ FIN/EXT BONNET		
CODE NO.		L	H2	L	L	H2	L	L	H2	h1	H1	h1	H1	A	B	H3	H4	H3	H4	CODE NO.
04	☐ 4"	352	118	368	384	130	394	397	140	278	1038	378	1138	650	680	863	1393	963	1493	D16SLB
06	☐ 6"×Red	451	154	473	489	162	508	511	180	312	1072	412	1172			897	1427	997	1527	

* FACE TO FACE : L (ISA-75.03-1992)
* FLANGE IS ACCORDING TO THE STANDARD WHICH IS DESCRIBED ON SPECIFICATION SHEET .

2						DR	Feng 2016.02.15	DWG NO.	
1						CH		E-GC100-D16SLB-R-N/S	
No.	DESCRIPTION	REV. BY	CH	APP	DATE	APP		REV.	SCORE
	REVISIONS					DATE		A	

GLOBE-VALVE *DIRECT ACTION*

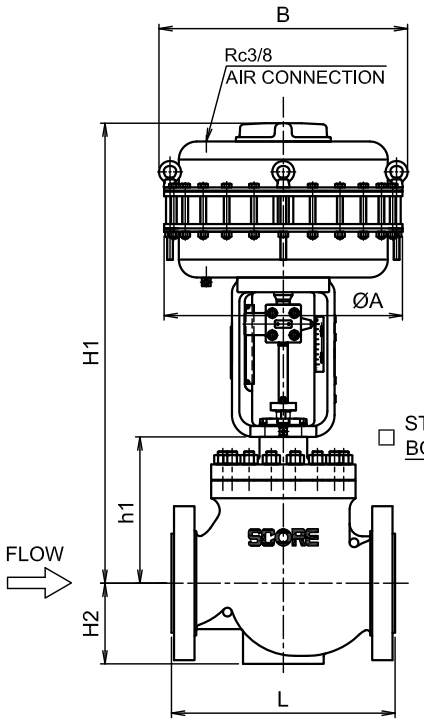

☐ STANDARD BONNET

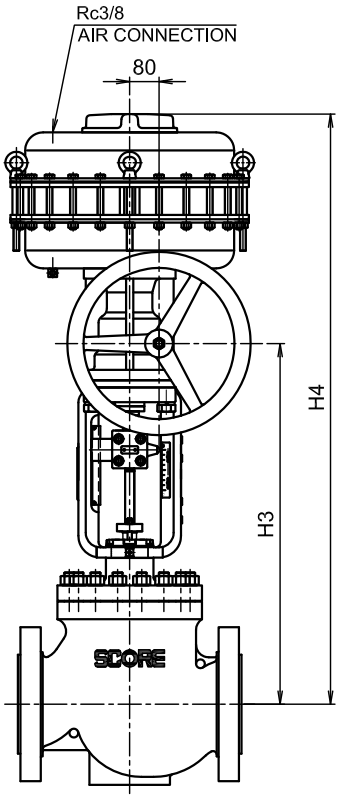

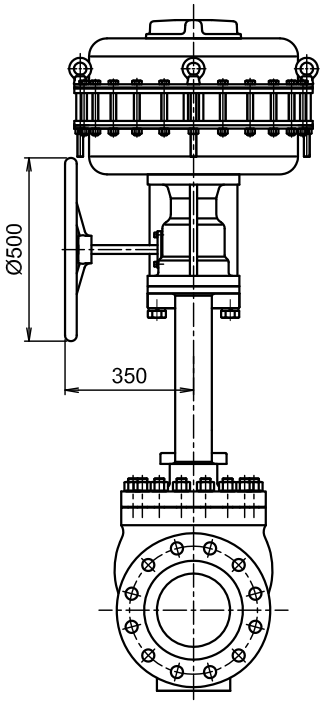

☐ WITH MANUAL HANDLE

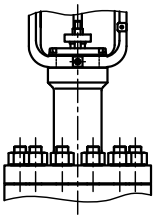

☐ FIN EXTENSION BONNET

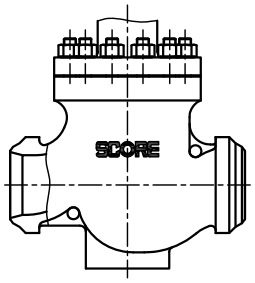

☐ BUTT WELDING

DIMENSIONS

UNIT: mm

VALVE SIZE		☐ANSI 150# RF ☐PN16 RF		☐ANSI 300# ☐PN25 ☐PN40			☐ANSI 600# ☐PN63 ☐PN100			☐ STANDARD BONNET		☐ FIN EXTENSION BONNET		ACTUATOR						
				☐RF ☐FM ☐BW	☐RJ		☐RF ☐FM ☐BW	☐RJ						SIZE		☐WITH MANUAL HANDLE				
																☐ STD BONNET		☐ FIN/EXT BONNET		
CODE NO.		L	H2	L	L	H2	L	L	H2	h1	H1	h1	H1	A	B	H3	H4	H3	H4	CODE NO.
06	☐ 6"	451	154	473	489	162	508	511	180	312	1172	412	1272	650	680	897	1527	997	1627	D16LLB
08	☐ 8"	543	190	568	584	197	610	613	220	399	1259	499	1359			984	1614	1084	1714	
10	☐ 10"	673	228	708	724	228	752	756	258	441	1301	541	1401			1026	1656	1126	1756	
12	☐ 12"	737	265	775	791	265	819	822	297	514	1374	614	1474			1099	1729	1199	1829	

* FACE TO FACE : L (ISA-75.03-1992)
* FLANGE IS ACCORDING TO THE STANDARD WHICH IS DESCRIBED ON SPECIFICATION SHEET .

2						DR	Feng 2016.09.21	DWG NO.	
1						CH		E-GC100-D16LLB-D-N/S	
No.	DESCRIPTION	REV. BY	CH	APP	DATE	APP		REV.	SCORE
REVISIONS						DATE		A	

GLOBE-VALVE *REVERSE ACTION*

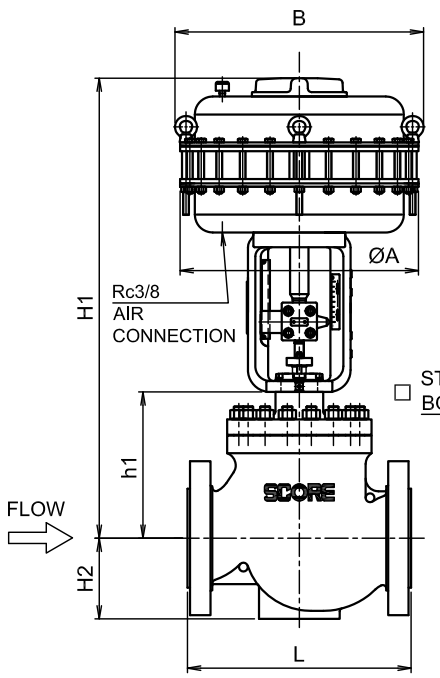

☐ STANDARD BONNET

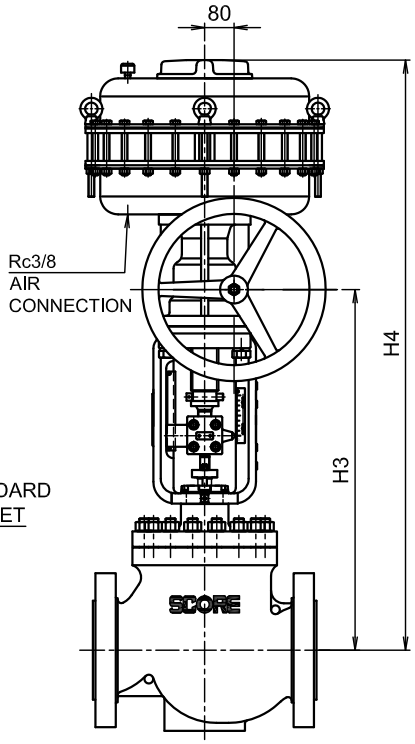

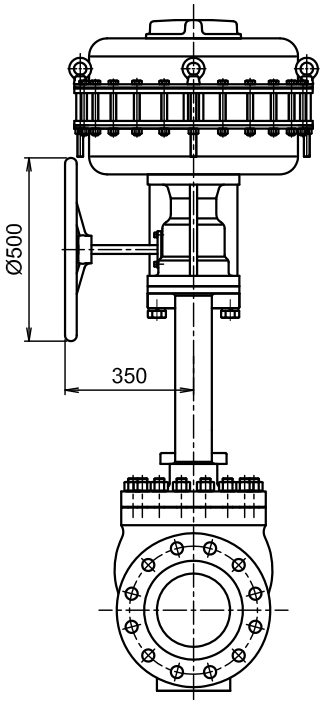

☐ WITH MANUAL HANDLE

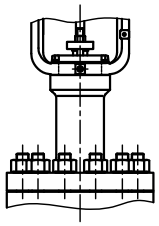

☐ FIN EXTENSION BONNET

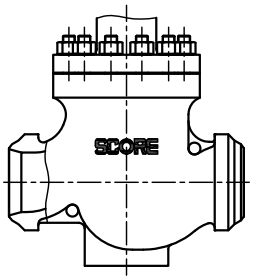

☐ BUTT WELDING

DIMENSIONS

UNIT: mm

VALVE SIZE		☐ANSI 150# RF ☐PN16 RF		☐ANSI 300# ☐PN25 ☐PN40 ☐RF ☐FM ☐BW	☐RJ		☐ANSI 600# ☐PN63 ☐PN100 ☐RF ☐FM ☐BW	☐RJ		☐ STANDARD BONNET		☐ FIN EXTENSION BONNET		ACTUATOR						
														SIZE		☐WITH MANUAL HANDLE				
																☐ STD BONNET		☐ FIN/EXT BONNET		
CODE NO.		L	H2	L	L	H2	L	L	H2	h1	H1	h1	H1	A	B	H3	H4	H3	H4	CODE NO.
06	☐ 6"	451	154	473	489	162	508	511	180	312	1172	412	1272	650	680	897	1527	997	1627	D16LLB
08	☐ 8"	543	190	568	584	197	610	613	220	399	1259	499	1359			984	1614	1084	1714	
10	☐ 10"	673	228	708	724	228	752	756	258	441	1301	541	1401			1026	1656	1126	1756	
12	☐ 12"	737	265	775	791	265	819	822	297	514	1374	614	1474			1099	1729	1199	1829	

* FACE TO FACE : L (ISA-75.03-1992)
* FLANGE IS ACCORDING TO THE STANDARD WHICH IS DESCRIBED ON SPECIFICATION SHEET .

2						DR	Feng 2016.02.15	DWG NO.	
1						CH		E-GC100-D16LLB-R-N/S	
No.	DESCRIPTION	REV. BY	CH	APP	DATE	APP		REV.	SCORE
	REVISIONS					DATE		A	

GLOBE-VALVE DOUBLE ACTING CYLINDER

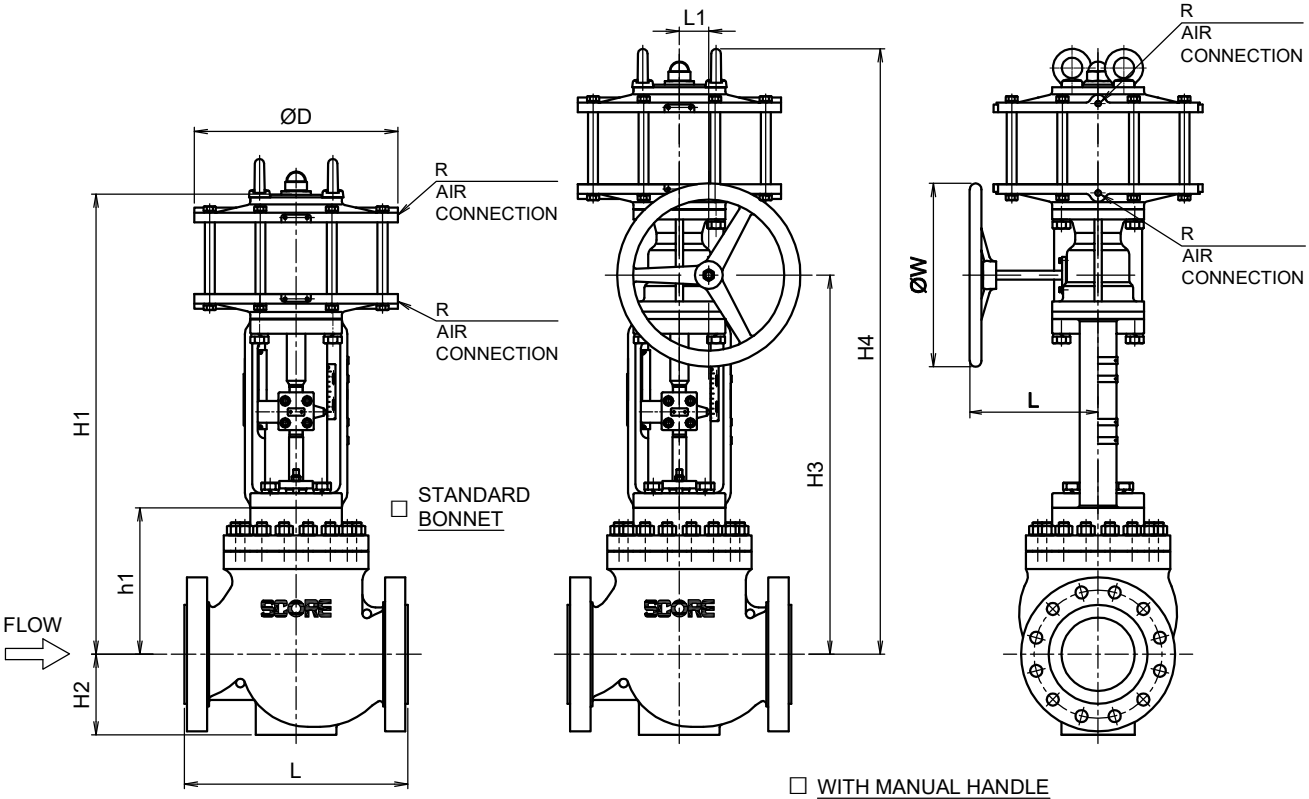

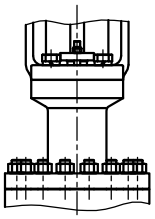

☐ FIN EXTENSION BONNET

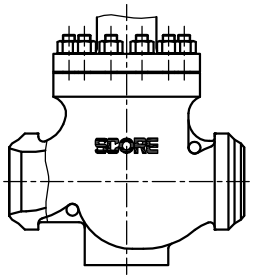

☐ BUTT WELDING

DIMENSIONS

UNIT: mm

VALVE SIZE		☐ANSI 150# RF ☐PN16 RF		☐ANSI 300# ☐PN25 ☐PN40 ☐RF ☐FM ☐BW			☐ANSI 600# ☐PN63 ☐PN100 ☐RF ☐FM ☐BW			☐ STD BONNET		☐ FIN EXT BONNET		ACTUATOR										
														CYLINDER SIZE	D	R	☐WITH MANUAL HANDLE							CODE NO.
																	☐ STD BONNET		☐ FIN/EXT BONNET		L	L1	W	
CODE NO.		L	H2	L	L	H2	L	L	H2	h1	H1	h1	H1				H3	H4	H3	H4				
06	☐ 6"	451	154	473	489	162	508	511	180	312	1087	412	1187	☐300	382	Rc3/8 (Rc1/2) (Rc3/4)	820	1347	920	1447	260	73	400	P130LA
08	☐ 8"	543	190	568	584	197	610	613	220	399	1174	499	1274	☐300	382		907	1434	1007	1534	260	73	400	P130LA
											1354		1454	☐450	555		1034	1654	1134	1754	350	80	500	P145LA
10	☐ 10"	673	228	708	724	228	752	756	258	441	1216	541	1316	☐300	382		949	1476	1049	1576	260	73	400	P130LA
											1396		1496	☐450	555		1076	1696	1176	1796	350	80	500	P145LA
12	☐ 12"	737	265	775	791	265	819	822	297	514	1289	614	1389	☐300	382		1022	1549	1122	1649	260	73	400	P130LA
											1469		1569	☐450	555		1149	1769	1249	1869	350	80	500	P145LA

* FACE TO FACE : L (ISA-75.03-1992)
* FLANGE IS ACCORDING TO THE STANDARD WHICH IS DESCRIBED ON SPECIFICATION SHEET .

2						DR	Feng 2016.02.15	DWG NO.	
1						CH		E-GC100-P100LA-N/S	
No.	DESCRIPTION	REV. BY	CH	APP	DATE	APP		REV.	SCORE
	REVISIONS					DATE		A	

无锡斯考尔自动控制设备有限公司
Wuxi SCORE Automatic Control Equipment Co., Ltd.
江苏省无锡市新吴区锡贤路 **123-1** 号
No. 123-1, Xixian Road, Xinwu District, Wuxi, Jiangsu, 214111, P.R. China
Tel: 0510-88232861/62/63; Fax: 0510-88232860